THE OUTDOOR PLUS
USA MANUFACTURER OF FIRE & WATER PRODUCTS

PARADISE FALLS

SELF-CONTAINED UNIT

OWNER'S MANUAL

REGISTER YOUR PRODUCT

Read all instructions before operating your Paradise Falls

THIS IS A SAFETY ALERT SYMBOL

When you see this symbol on the feature or manual, look for one of the following signal word panels alerting you to the potential for personal injury, death, or major property damage.

WARNING
This waterfall structure requires an electrical connection. Please ensure that the power source is installed and maintained by a licensed electrician in compliance with local electrical codes. Do not use if the electrical components are damaged or exposed.

CAUTION
The waterfall surface and surrounding areas may be slippery when wet. Exercise caution when walking near the structure. Do not allow children or pets to play near the Paradise Falls.

CAUTION
IMPROPER USE. Use this equipment only for its intended purpose. Misuse or modification of the equipment may result in injury or damage to the equipment.

WARNING
The power source for the waterfall should be connected to a Ground Fault Circuit Interrupter (GFCI) to protect against electric shock in case of a fault.

WARNING
Do not allow electrical cords or components to come into contact with water. Keep them dry at all times.

WARNING
Only a qualified service technician should handle the installation, repairs, or replacement of parts for your Paradise Falls. If you lack the necessary expertise, please seek the assistance of a qualified professional contractor or technician to ensure proper and safe maintenance.

WARNING
NEVER leave the Paradise Falls unattanded.

WARNING
When not in use, turn off the electrical power to the waterfall structure to conserve energy and prevent accidents.

SAFETY

WARNING LABELS & SYMBOLS 2
TABLE OF CONTENTS 3

PARADISE FALLS INFORMATION

PRODUCT FEATURES 5
PRODUCT SPECIFICATIONS 6
PRODUCT COMPONENTS 7

PARADISE FALLS INSTALLATION

ASSEMBLY INSTRUCTIONS 11

PARADISE FALLS INSTALLATION

STARTING UP & SHUTTING DOWN 16
LED SETUP 17
CARE AND MAINTENANCE 18
REPLACEMENTS PARTS 19
TROUBLESHOOTING 20

WARRANTY & SUPPORT

WARRANTY INFORMATION 21
CUSTOMER SUPPORT 22

TO INSTALLER: Leave this manual with the Paradise Falls.
TO CONSUMER: Keep this manual for future reference.

CALIFORNIA PROP 65 WARNING
This product can expose you to chemicals including Lead and Lead Compounds, which are known to the state of California to cause cancer, and Carbon Monoxide, Lead and Lead Compounds which are known to the state of California to cause birth defects or other reproductive harm. For more information go to www.P65Warnings.ca.gov.

PARADISE FALLS

PRODUCT FEATURES

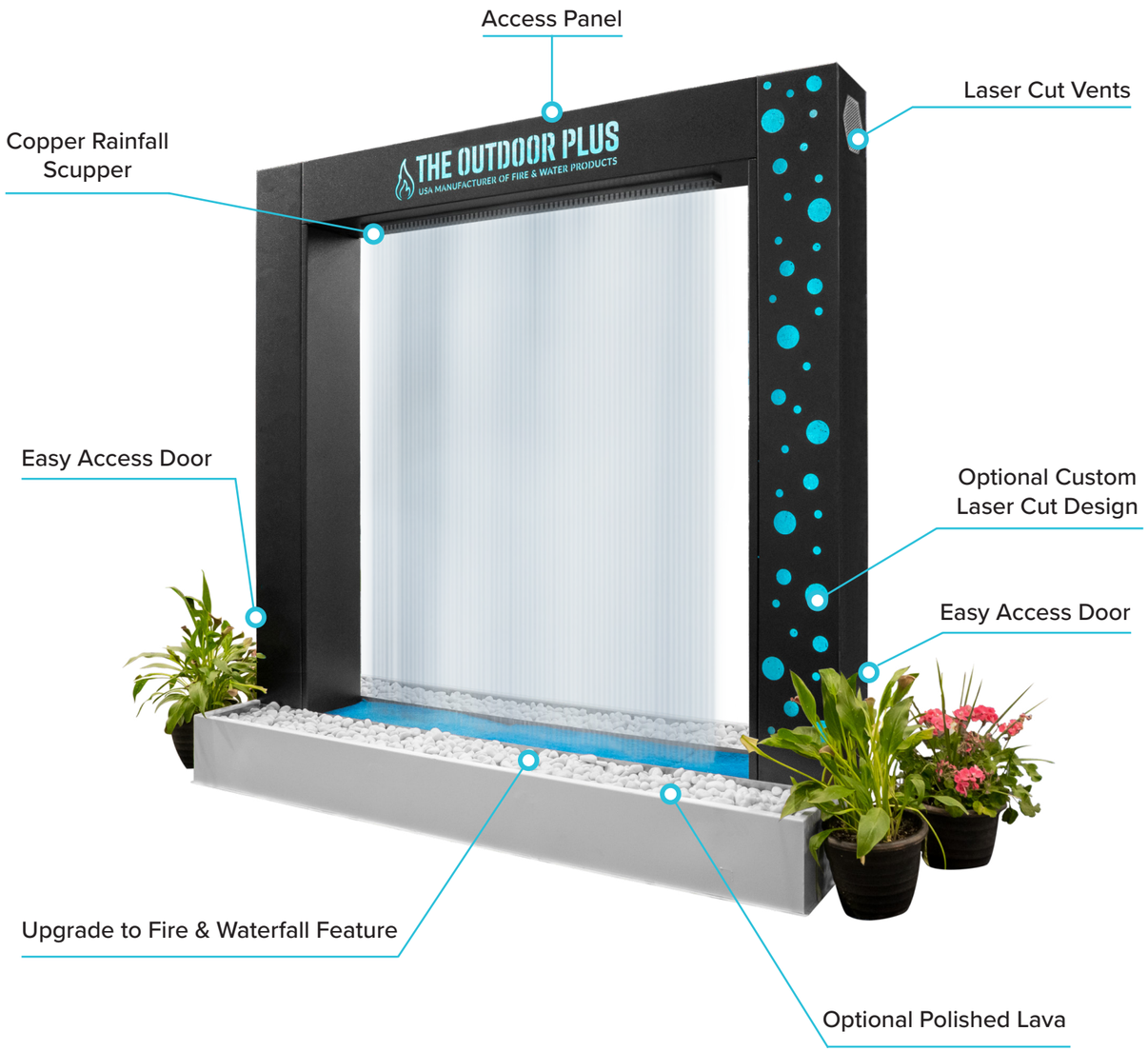

PRODUCT SPECIFICATIONS

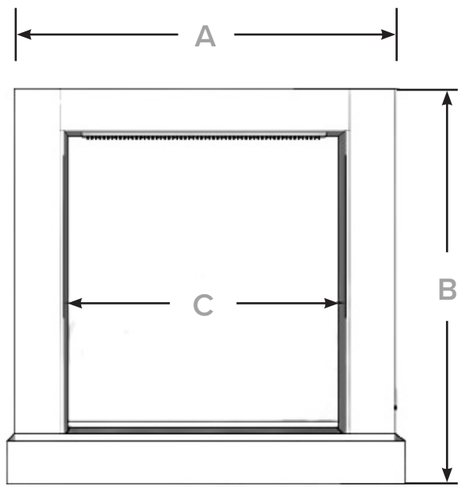

TOP VIEW

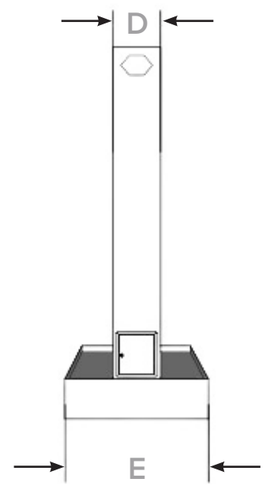

FRONT SIDE VIEW

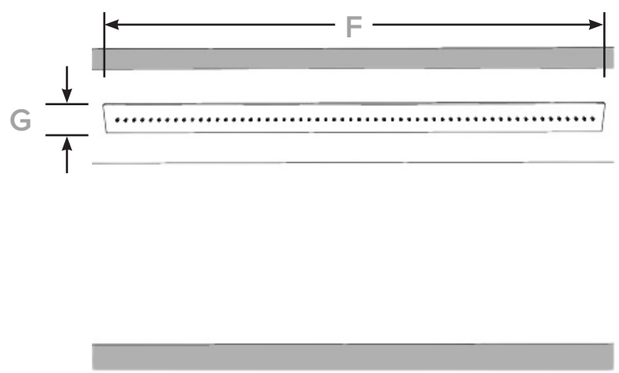

BOTTOM VIEW

PART NUMBER	A	B	C	D	E	F	G	GPM	CAPACITY	WEIGHT
OPT-PRDWO60	60″	72″	37 3/4″	12″	34″	30″	3 1/2″	~30-35	~110 gal	~215lbs
OPT-PRDWO72	72″	84″	49 3/4″	12″	34″	42″	3 1/2″	~35-40	~130 gal	~260lbs
OPT-PRDWO84	84″	90″	61 3/4″	12″	34″	54″	3 1/2″	~40-45	~150 gal	~300lbs
OPT-PRDWO96	96″	90″	73 3/4″	12″	34″	60″	3 1/2″	~45-50	~175 gal	~345lbs

~ The GPM, Water Capacity and Weight of the Paradise Falls vary depending on customization and specific requests. Please contact The Outdoor Plus at **(909) 469-5579** for more information.

PRODUCT COMPONENTS

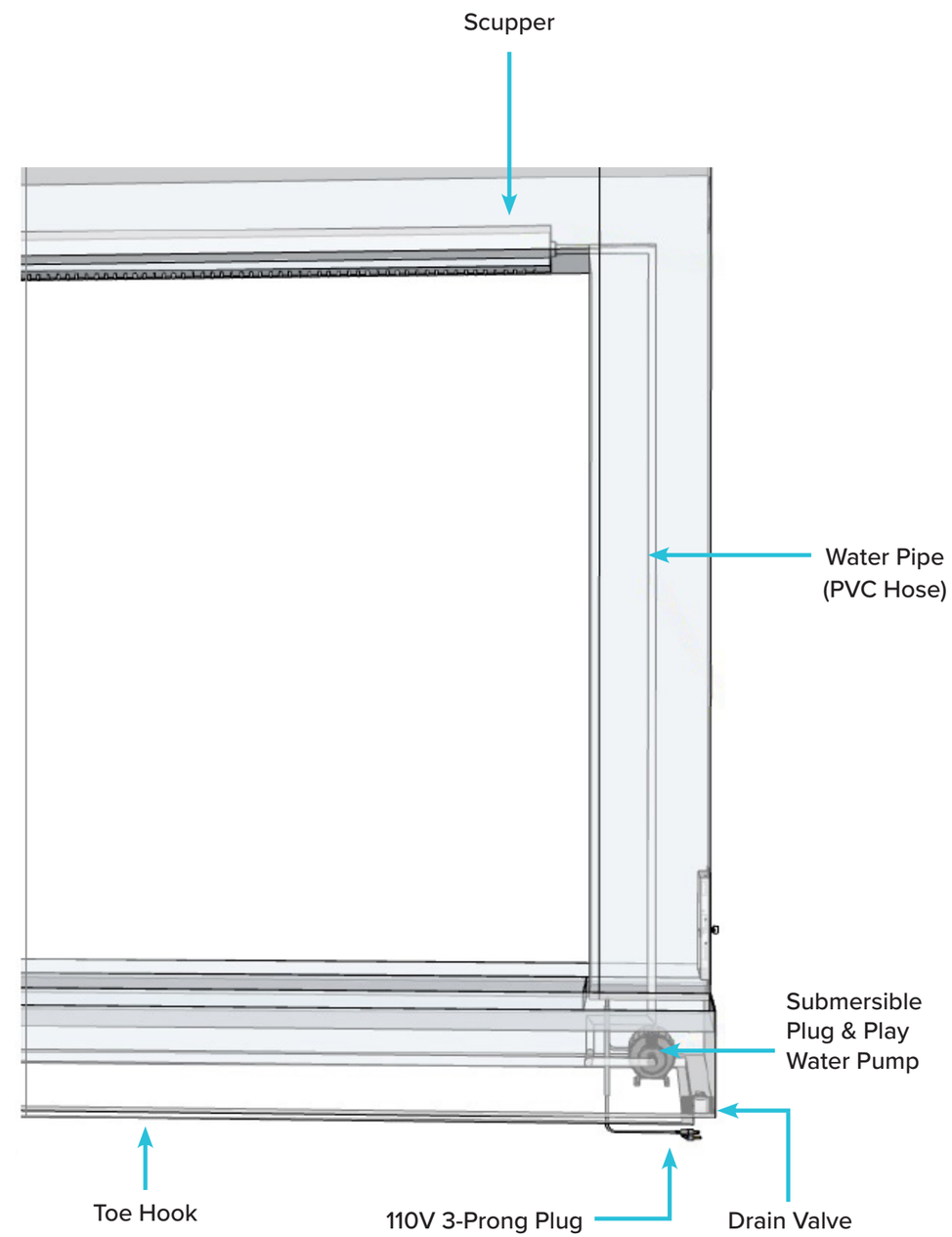

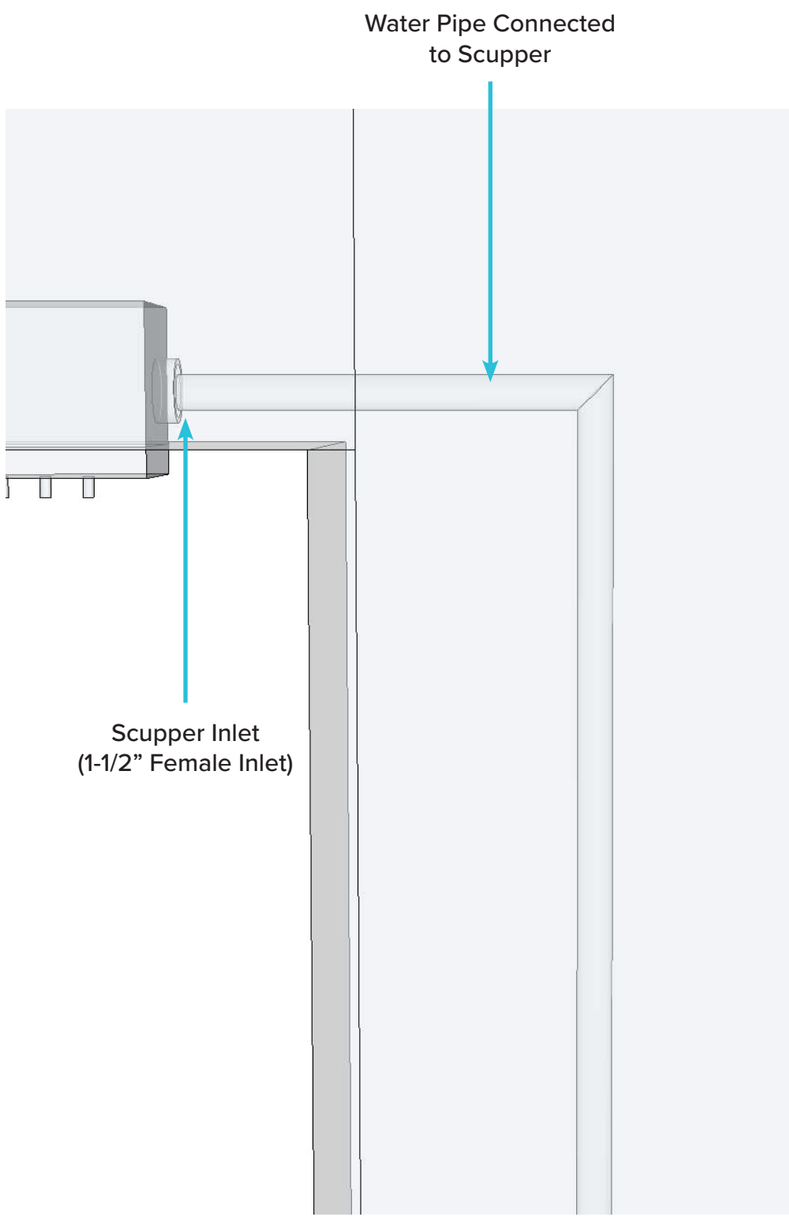
Water Pipe Connected
to Scupper
Scupper Inlet
(1-1/2” Female Inlet)

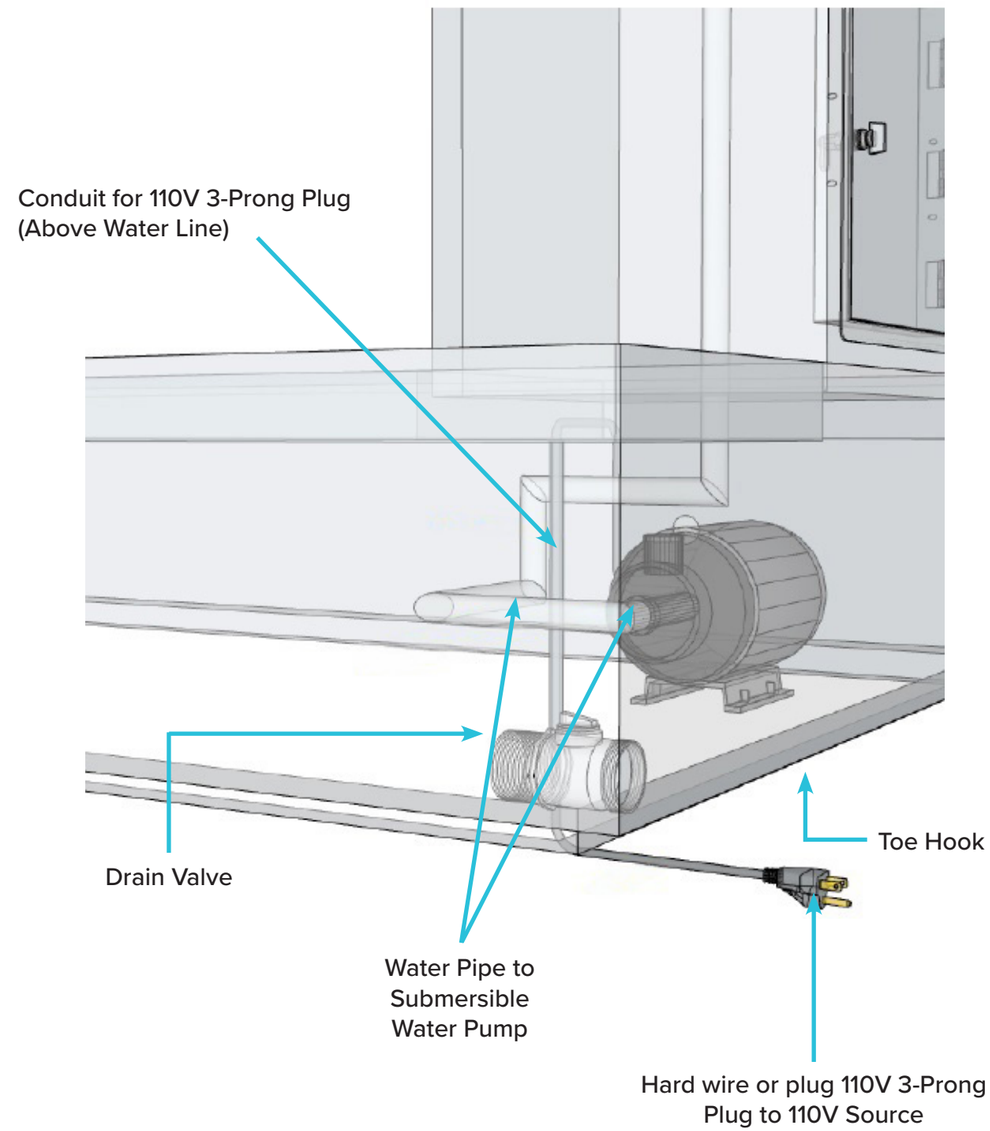
Conduit for 110V 3-Prong Plug
(Above Water Line)
Drain Valve
Toe Hook
Water Pipe to
Submersible
Water Pump
Hard wire or plug 110V 3-Prong
Plug to 110V Source

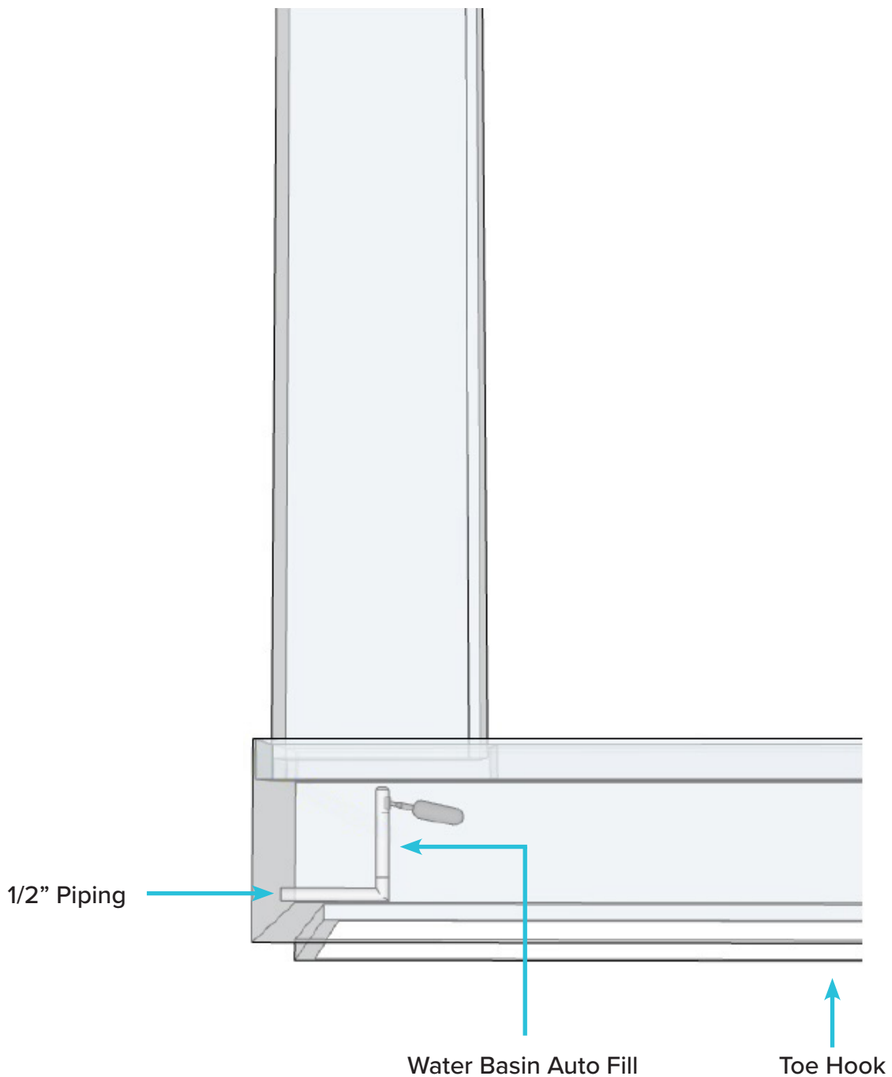

Attach Support Panels

Step 1:

Use the provided fasteners to attach the support panel to each column. This panel will support the top spillway beam later.

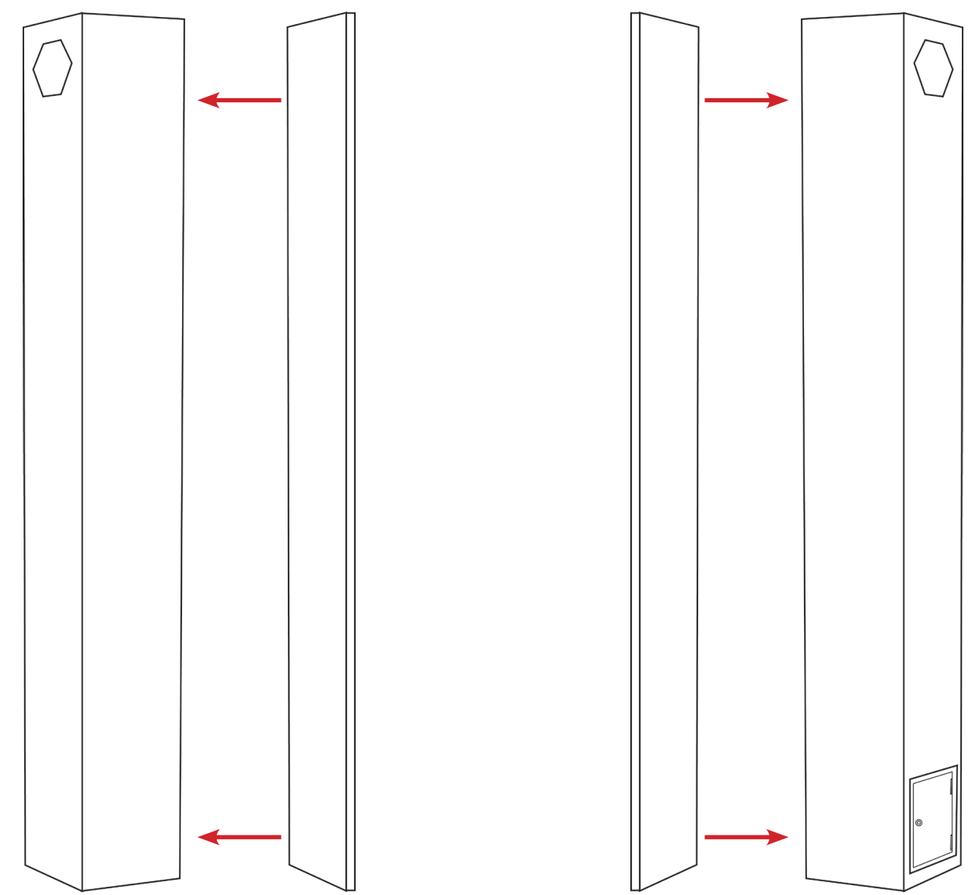

Base Placement

Step 2:

Gently place the basin down on a leveled surface.

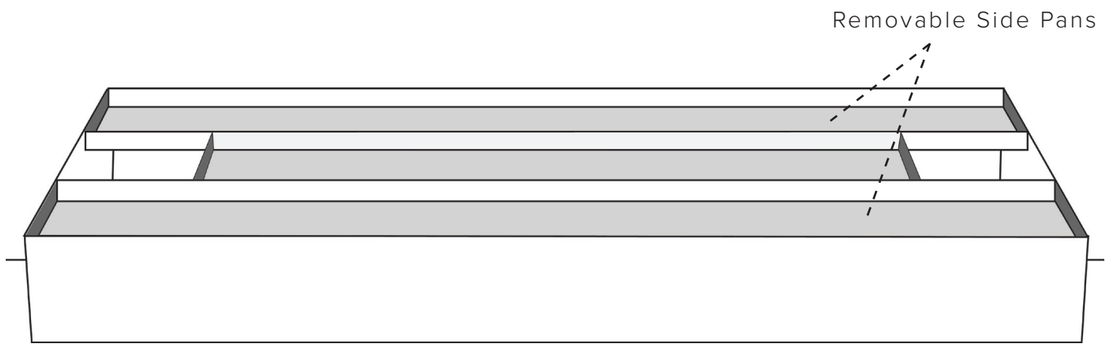

Position Columns

Step 3:

Position the column with the attached panel AND access door over the conduit for the 110V 3-Prong Plug. Secure it firmly with the provided fasteners. Repeat the process with the remaining column on the opposite side of the base. Ensure it is securely fastened.

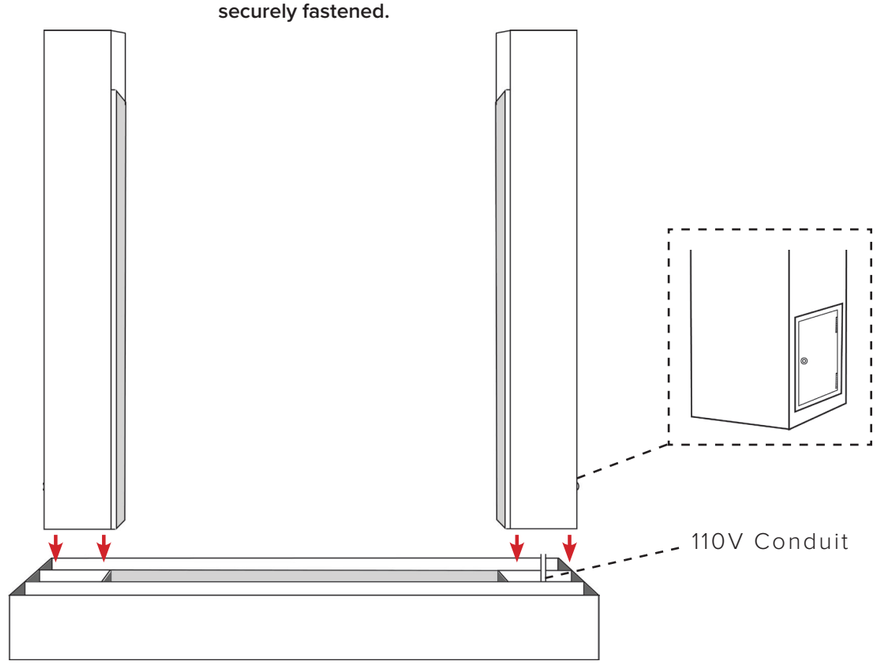

Attach Spillway Beam

Step 4:

Carefully drop the Spillway Beam on top of both support panels. Ensure it is securely fastened with the provided fasteners

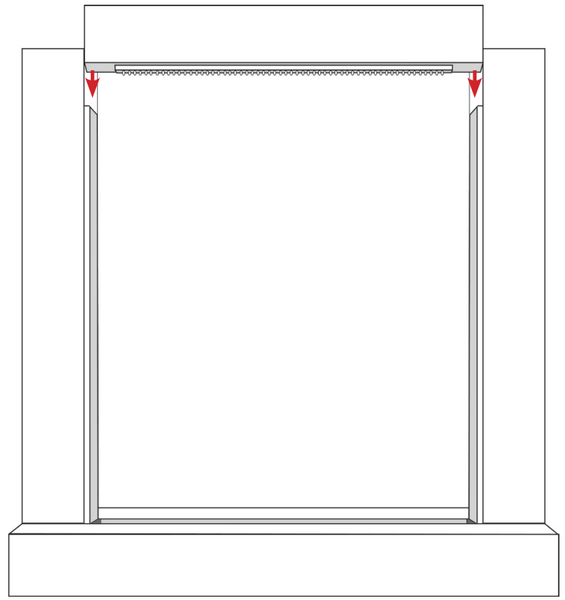

Attach PVC

Step 5:

Connect one end of the PVC Water Hose to the Quick Disconnect fitting located on the spillway of the water feature.

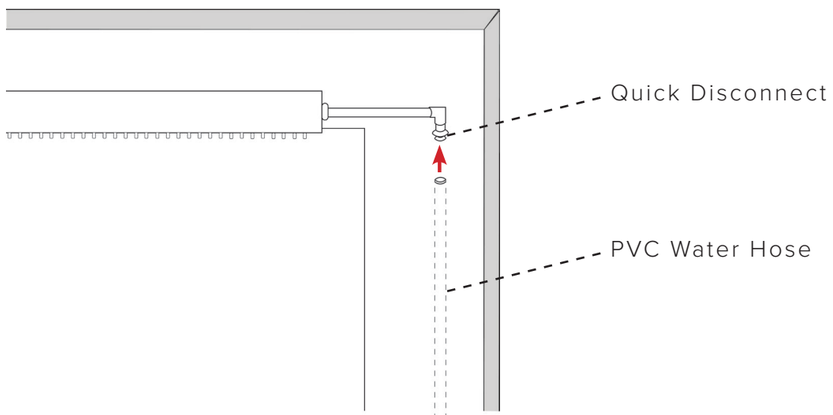

Attach Spillway Beam

Step 6:

Drop the other end of the PVC hose through the column with the access door, then connect the PVC hose to the water pump through the access door.

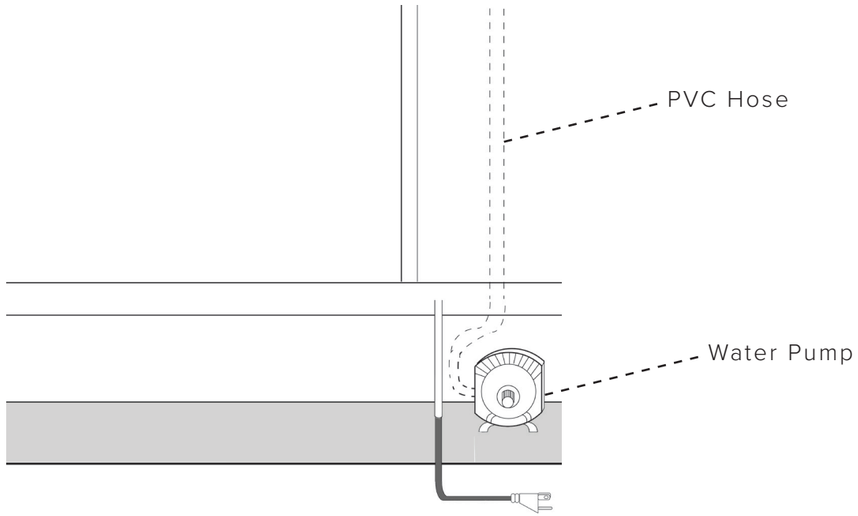

Attach Access Panel

Step 7:

Attach the Access Panel on top of the Spillway Beam using the provided fasteners.

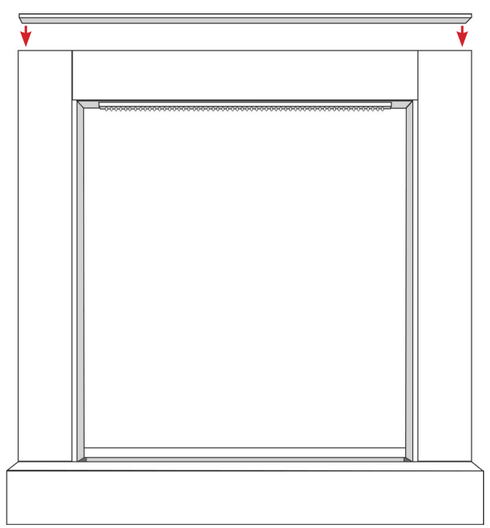

NOTE:
The Access Panel can be easily removed for service.

Adding Media

Step 8:

Carefully pour the provided Lava Chunks (or your chosen media) into each Side Pan, distributing them evenly for aesthetic appeal. Ensure that the media fills the pans adequately but does not obstruct any components or fall into the basin.

Allowing media to fall into the basin can potentially block or damge the water pump, preventing your Paradise Falls from operating properly.

Then carefully place the provided sponge mats on top of the Perforated Center Pan, ensuring they cover the entire surface area.

NOTE: **The provided sponge mats serve as filtration media to trap debris and prevent clogging of the water feature. Replace the filter as needed according to your specific environment.**

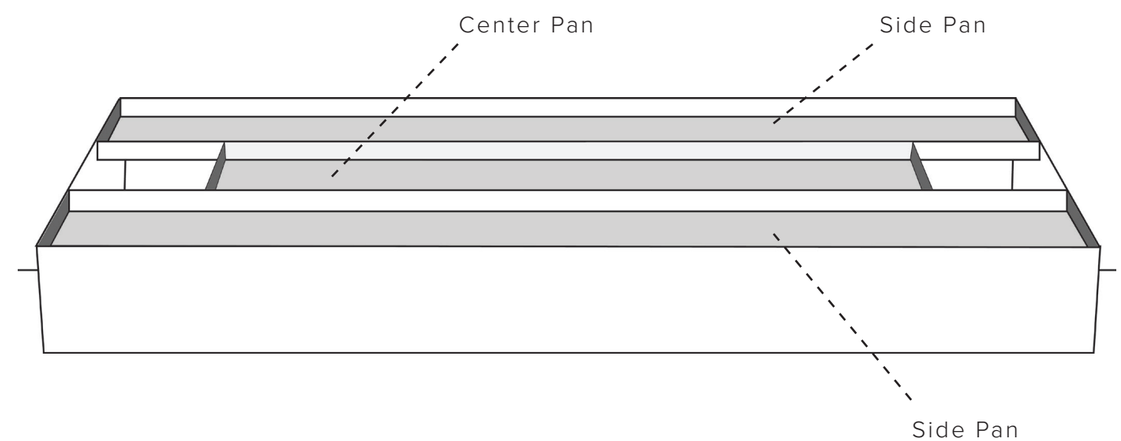

BEFORE STARTING

• Before starting up, ensure your Paradise Falls has an adequate amount of water. Water can be added from either the top of the basin or through the access door. Maintain a 3-4 inch gap between the surface of the water and the bottom of the Center Pan.

• Once the basin is filled, simply plug in the 3-Prong Plug to a Ground Fault Circuit Interrupter (GFCI) outlet to protect against electric shock in case of a fault. Your Paradise Falls is now assembled and ready to enjoy!

NOTE:
Keep a 3-4 inch space between the water's surface and the lower edge of the Center Pan.

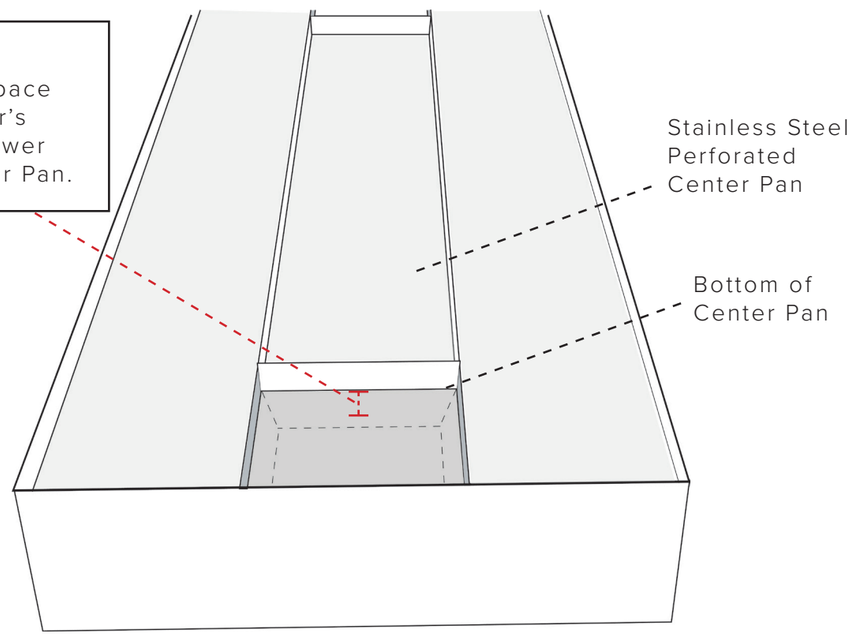

SHUTTING DOWN

• To shut down your Paradise Falls, simply unplug the 3-Prong Plug from the the outlet. If you've opted to hardwire your Paradise Falls, ensure you have a designated switch or control mechanism installed to easily shut off the unit.

PARADISE FALLS WITH LED

• If your Paradise Falls comes with LED, ensure that you keep electrical components away from water to avoid electrical shock.

• Use caution when handling LED components to prevent damage or injury.

• In case of any malfunction or damage to the LED system, disconnect power and seek professional assistance for repairs.

LED LIGHT QUICK START GUIDE

1. Download the **The Outdoor Plus** app from either the App Store or the Google Play Store. Open the App once the installation is complete.

2. Within the app, tap the gear icon to go to **Settings**. Select **Nearby Devices** and ensure your location is enabled. Then select **AAV RGB** to connect.

PRO TIPS

• Keep your device's Bluetooth turned on and within proximity of the lights for a stable connection.

• Experiment with different color combinations and effects to fully enjoy the ambiance.

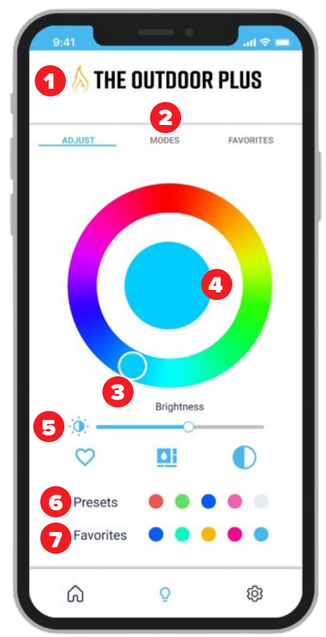

1. On/Off Switch
Easily power your LED lights on or off with the designated switch.

2. Mode Options
Select dynamic modes like 'Party' or 'Strobe' for an electrifying experience.

3. Color Adjuster
Glide the adjuster across the Color Wheel for a seamless color change.

4. Color Preview
Preview selected colors as you glide the color adjuster.

5. Brightness
Adjust brightness levels effortlessly to set the perfect lighting intensity.

6. Preset Colors
Access a variety of pre-defined colors for quick and convenient lighting choices.

7. Personal Favorites
Create a personalized ambiance by choosing and saving custom color combinations.

Download on the App Store

GET IT ON Google Play

REGULAR CLEANING

• Remove Debris: Periodically remove any leaves, twigs, or other debris that may accumulate in the water basin or around the scupper. Use a skimmer net or similar tool for easy removal.

• Wipe Down Surfaces: Wipe down the surfaces of the water feature, including the basin and scupper, with a clean, damp cloth to remove any dirt or algae buildup. Avoid using any abrasive cleaners that could damage the finish.

WATER QUALITY MANAGEMENT

• Monitor Water Level: Check the water level in the basin regularly and top it up as neede to maintain proper operation of the pump.

PUMP MAINTENANCE

• Check Pump Operation: Regularly inspect the pump to ensure it is functioning correctly. Listen for any unusual noises or vibrations, which may indoicate a problem.

• Clean Pump Intake: Clean the pump intake to remove any debris that could obstruct water flow.

SEASONAL MAINTENANCE

• Winterization: If you live in a region with freezing temperatures, it's essential to winterize your Paradise Falls to prevent damage. Drain the water from the basin and disconnect the pump. Store the pump indoors in a dry location to protect it from freezing.

• Spring Startup: In the spring, thoroughly clean the water feature and inspect all components before restarting the pump. Replace any worn or damaged parts as needed.

PROFESSIONAL SERVICE

• If you encounter any issues with your Paradise Falls that you are unable to resolve on your own, don't hesitate to contact The Outdoor Plus or a professional water feature technician for assistance.

REPLACEMENT PARTS

• To replace a part on your Paradise Falls, visit: **TheOutdoorPlus.com** and use the corresponding part number to search for your replacement. Or, email us at **support@theoutdoorplus.com** for assistance.

RGB CONTROL BOX

OPT-RGB-CNTLR

16FT EXTENSION

OPT-RGB-16EXT

LED STRIP

OPT-RGB-108SRP

SUBMERSIBLE WATER PUMP

OPT-SUBWP

AUTO REFILL

OPT-AUTORF

1/2" DRAIN VALVE

OPT-RP-DRV

TROUBLESHOOTING

PROBLEM	SOLUTION
Paradise Falls is not operating.	1. Check if the electrical power source is connected and working.
	2. Ensure the electrical cord and connections are secure and dry.
There is reduced water flow.	1. Clean the pump and intake to remove any debris.
	2. Ensure a stable electrical power source without fluctuations. If issues persist, consult an electrician.
There is excessive water flow.	1. Adjust the autofill system to reduce water input.
	2. Check and clear any obstructions in the drainage system to allow proper water flow.
There are unusual vibrations or noises.	1.Check and tighten any loose components. Asjust misaligned parts if necessary.
	2. If vibrations or noise persist, consult a qualified technician or electrician for further investigation.
LED lights not functioning.	1. Ensure the electrical connections are secure, or consult a qualified electrician for assitance.
	2. Replace LED lights with compatible replacements.

The Outdoor Plus Company (TOP) warranties its products against manufacturing defects that prevent safe and proper functioning as follows:

Stainless Steel & Aluminum Pans:
Commercial - 1 year; Residential - 5 years

- This commences from the date of original sale / shipment from The Outdoor Plus.
- The warranty on parts and in-house labor will apply only to claims presented to us by T.O.P's original customer and is in lieu of all other warranties expressed or implied.
- The defective product must be sent back to TOP with a Return Merchandise Authorization (RMA) issued by TOP for that specific product which states the nature of the defect or warranty claim. The original purchase information will be required.
- Product to be returned should be packed carefully. The Outdoor Plus is not responsible for shipping damage on returned items.
- RMA's are only valid for 30 days which states the nature of the defect or warranty claim after the expiration date.
- The RMA number must be indicated on the outside of the return package and a copy of the RMA should be placed in the package with product.
- TOP is not responsible for damaged caused by overheating, modification, abuse, improper storage, installation, or maintenance.
- TOP is not responsible for surface level rust on stainless steel/metal products.
- TOP is not responsible for the actions of third-party members including negligence of the installer.
- TOP is not liable for damages caused by any third-party moving companies. Customers are advised to ensure their chosen moves are careful and insured.
- TOP is not responsible for the actions including negligence of the installer.
- Any labor involving installation or maintenance with the unit is not covered.
- This warranty does not cover claims for incidental or consequential damage and indirect collateral expenses arising from product defects or warranty repairs. Products manufactured by TOP include cLCus, UL, or CSA Certified models, of which cannot be altered or modified in any way.
- The Outdoor Plus strongly advises the use of a cover/canvas cover to protect your product.
- TOP is not responsible for local codes and will not accept a return on any product that is not approved for installation. Please check with your local authorities or governing agencies for proper approvals before purchasing.

PRODUCT RETURN POLICY
- No returns on made-to-order goods.
- No returns on custom features, NO EXCEPTIONS.
- If a product is delivered incorrectly, it is the recipients responsibility to notify TOP within 48 hours. TOP is not responsible for incorrect or damaged packages and shipments 48 hours after they have been received. Please call (909) 460-5579 or email: support@theoutdoorplus.com for help with warranty, replacements, returns, or if you have any support related questions.

PRODUCT TESTING PROGRAM
If you believe a unit or component you received is defective, The Outdoor Plus will gladly test any component at T.O.P's facility. TOP will cover shipping back to you.

DEFECTIVE
If an item is found to be defective it will be repaired or replaced at T.O.P's discretion. TOP will absorb all costs of outgoing freight and replacement costs if product is in warranty.

NON-DEFECTIVE
If the product is found to be non-defective it will be returned to the customer - no credit will be given.

TOP ERROR
If a return is needed due to a mistake on T.O.P's part, we will issue a RMA and Return Services Label. When products are received at TOP, credit will be issued for the products and the outgoing freight on the original invoice.

CUSTOMER ERROR
If an RMA is asked for and covers current new proucts in the original package, we will authorize the return. The customer is responsible for the return shipping. When products are received we will issue credit for the original customer cost less a 25% restocking charge. Custom orders do not apply.

FREIGHT POLICY
All orders will be shipped FOB Ontario, California, with a standard shipping carrier selected by TOP unless customer specifically requests their own carrier and account. A freight quote may be requested in advance. TOP works diligently with standard carriers to achieve the best discounts available.

PROUDLY DESIGNED &
MADE IN THE **USA**

THE OUTDOOR PLUS
USA MANUFACTURER OF FIRE & WATER PRODUCTS

701 S DUPONT AVE
ONTARIO, CA 91761
(909) 460 - 5579