Installation and Operation Instructions
Indoor Wood-burning Fireplace

P/N 126601-01 Rev. P 10/2025

Ce manuel est disponible en francais, simplement en faire la demande. Numéro de la pièce 126601-02.

REPORT NO. F09-095

Models

WRT4536WS	WRT4542WS	WRT4550WS
WRT4536WH	WRT4542WH	WRT4550WH

SAVE THIS BOOK

This book is valuable. In addition to instructing you on how to install and maintain your appliance, it also contains information that will enable you to obtain replacement parts or accessory items when needed. Keep it with your other important papers.

INSTALLER: Leave this manual with the appliance. CONSUMER: Retain this manual for future reference.	**Installateur : Laissez cette notice avec l'appareil. Consommateur : Conservez cette notice pour consultation ultérieure.**
This wood-burning fireplace complies with UL127 CAN/ULC-S610-M87 standard as a FACTORY BUILT FIREPLACE.	**Ce foyer au bois est conforme aux UL 127 CAN/ULC-S610-M87 norme comme une USINE CONSTRUITE CHEMINÉE.**

This fireplace is approved for use as a wood-burning fireplace or for use with a vented gas log approved to ANSI Z21.60 or Z21.84 standards or for use with a vent-free gas log heater approved to ANSI Z21.11.2 standard.

FOR CANADA: The authority having jurisdiction (such as the municipal building department, fire department, etc.) should be contacted before installation to determine the need to obtain a permit.	**POUR LE CANADA: L'autorité compétente (comme le service municipal du bâtiment, les pompiers, etc.) doit être contacté avant l'installation afin de déterminer la nécessité d'obtenir un permis.**

This installation manual will enable you to obtain a safe, efficient and dependable installation of your fireplace system. Please read and understand these instructions before beginning your installation.

Do not alter or modify the fireplace or its components under any circumstances. Any modification or alteration of the fireplace system, including but not limited to the fireplace, chimney components and accessories, may void the warranty, listings and approvals of this system and could result in an unsafe and potentially dangerous installation.

IMPORTANT! TO ASSURE PROPER ALIGNMENT OF GLASS DOORS: INSTALL THIS FIREPLACE IN A SQUARE AND PLUMB CONDITION, USING SHIMS AS NECESSARY AT SIDES AND/OR BOTTOM.

NOTE: DIAGRAMS AND ILLUSTRATIONS THROUGHOUT THE MANUAL ARE NOT TO SCALE.

Thank you for your purchase. We appreciate your business!

Please carefully read and follow all instructions in this manual. **Pay special attention to all warnings and safety information.**

Following these safety, care, and operation instructions will help ensure many years of dependable and enjoyable service from your fireplace.

Please read and understand these instructions before installing or operating.

NATIONAL FIREPLACE INSTITUTE NFI CERTIFIED www.nficertified.org

We recommend that our woodburning hearth products be installed and serviced by professionals who are certified in the U.S. by the National Fireplace Institute® (NFI) as NFI Woodburning Specialists or who are certified in Canada by Wood Energy Technical Training (WETT).

Wood Energy Technical Training www.wettinc.ca

TABLE OF CONTENTS

Safety 2
Specifications 4
Fireplace Installation 7
Venting Installation 9
Refractory Panels Installation 16
Optional Gas Line Installation 17
Operation and Maintenance Guidelines 18
Parts 19
Accessories 23
Important Notices - Canada 25
Technical Service 25
Replacement Parts 25
Draft Smoke Guidelines - Appendix A 26
Warranty 29

SAFETY

⚠ WARNING

This product can expose you to chemicals including Carbon Black, which is known to the State of California to cause cancer, and Carbon Monoxide, which is known to the State of California to cause birth defects or other reproductive harm. For more information go to www.P65Warnings.ca.gov.

⚠ WARNING: Improper installation, adjustment, alteration, service or maintenance can cause injury or property damage. Refer to this manual for correct installation and operational procedures. For assistance or additional information consult a qualified installer, service agency or the gas supplier.

IMPORTANT: Check local codes before installing this fireplace.

Before beginning the installation of the fireplace, read these instructions through completely.

- This INNOVATIVE HEARTH PRODUCTS, LLC (IHP) fireplace and its components are safe when installed according to this installation manual. Unless you use IHP components, which have been designed and tested for the fireplace system, you may cause a fire hazard.
- The IHP warranty will be voided by and IHP disclaims any responsibility for the following actions.
  a. Modification of the fireplace, components, doors, air inlet system and damper control.
  b. Use of any component part not manufactured or approved by IHP in combination with an IHP fireplace system.

Proper installation is the most important step in ensuring safe and continuous operation of the fireplace. Consult the local building codes as to the particular requirements concerned with the installation of all factory built fireplaces.

⚠ WARNING: Do not install a fireplace insert in this box unless the manufacturer's instructions with the insert specifically state this fireplace has been tested for use with this insert.

FOR YOUR SAFETY

- **Do not store or use gasoline or any other flammable vapors or liquids in the vicinity of this or any other appliance.**
- **Due to high temperatures, the appliance should be located out of traffic and away from furniture and draperies.**
- **Do not place clothing or other flammable materials on or near the appliance.**
- **Never leave children unattended when a fire is burning in the fireplace.**

⚠ WARNING: Use solid wood or processed solid fuel firelogs only. When processed wood fuel fire logs are used, do not poke or stir the logs while they are burning. Use only fire logs that have been evaluated for the application in fireplace and refer to fire log warnings and caution markings on packaging prior to use.

This fireplace is not intended to be used as a substitute for a furnace to heat an entire home. Use for supplemental heat only.

Overfiring of a fireplace is a condition where excessive temperatures are reached, beyond the design capabilities of the appliance. The damage that occurs from overfiring is not covered under the manufacturer's limited warranty.

⚠ WARNING: CONTINUED OVERFIRING CAN PERMANENTLY DAMAGE YOUR FIREPLACE SYSTEM. SOME EXAMPLES OF CONDITIONS THAT COULD CAUSE OVERFIRING ARE:

- BURNING QUANTITIES OF SCRAP LUMBER, PINE BRANCHES, PAPER OR CARDBOARD BOXES WHICH EXCEED THE VOLUME OF THE NORMAL LOG FIRE.
- BURNING TRASH, CHEMICALS OR CHEMICALLY TREATED COMBUSTIBLES.

Disposal of Ashes

Ashes should be placed in a metal container with a tight-fitting lid. The closed container of ashes should be placed on a noncombustible floor or on the ground, well away from all combustible materials, pending final disposal. If the ashes are disposed of by burial in soil or otherwise locally dispersed, they should be retained in the closed container until all cinders have thoroughly cooled.

WHEN USING THE DECORATIVE APPLIANCE, THE FIREPLACE DAMPER MUST BE SET IN THE FULLY OPEN POSITION.

Never use gasoline, gasoline-type lantern fuel, kerosene, charcoal lighter fluid, or similar liquids to start or 'freshen up' a fire in this fireplace. Keep all such liquids well away from the fireplace while it is in use.

Use SOLID WOOD only for fuel. It is best to use dry and well seasoned hardwood. Softwoods tend to burn very quickly. DO NOT use treated wood, charcoal, coal, trash, driftwood or woods that have been dipped in tar, pitch, pine tar, creosote, etc. Wood products made with synthetic binders, such as plywood, produce abnormally high temperatures and sputtering, smoking fires. When burning artificial logs, please read and follow the instructions provided by the manufacturer.

Never burn treated construction lumber or scraps. These woods burn excessively hot and may contain chemicals used to treat insects and fungus. When burned, these chemicals can pose a significant hazard.

IMPORTANT: See appendix A, page 26 for additional information regarding draft requirements, smoking causes and troubleshooting.

⚠ WARNING: BURNING IMPROPER FUEL (I.E. CHARCOAL) CAN RESULT IN CARBON MONOXIDE POISONING, WHICH MAY LEAD TO DEATH!

Carbon Monoxide Poisoning – Early signs of carbon monoxide poisoning resemble the flu with headaches, dizziness, or nausea. If you have these signs, get fresh air at once! Have the appliance inspected by a qualified service technician. Some people are more affected by carbon monoxide than others. These include pregnant women, people with heart or lung disease or anemia, those under the influence of alcohol, and those at high altitudes.

Ventilation Requirements - Provide adequate air for combustion. The fresh air requirements of this appliance must be met within the space where it will be installed.

Smoke Detectors - Since there are always several potential sources of fire in any home, we recommend installing smoke detectors. If possible, install the smoke detector in a hallway adjacent to the room (to reduce the possibility of occasional false activation from the heat produced by the appliance). If your local code requires a smoke detector be installed within the same room, you must follow the requirements of your local code. Check with your local building department for requirements in your area.

Creosote – Formation and Need for Removal

When wood is burned slowly, it produces tar and other organic vapors, which combine with expelled moisture to form creosote. The creosote vapors condense in the relatively cool chimney flue of a slow-burning fire. As a result, creosote residue accumulates on the flue lining. When ignited this creosote makes an extremely hot fire.

The chimney shall be inspected at least twice a year during the heating season to determine when a creosote buildup has occurred. When creosote has accumulated (1/8" [3 mm] or more) it shall be removed to reduce the risk of a chimney fire.

⚠ WARNING: Children and adults should be alerted to the hazards of high surface temperatures and to stay away to avoid burns or clothing ignition. Young children should be carefully supervised when in the same room as fireplace.

36" MODEL

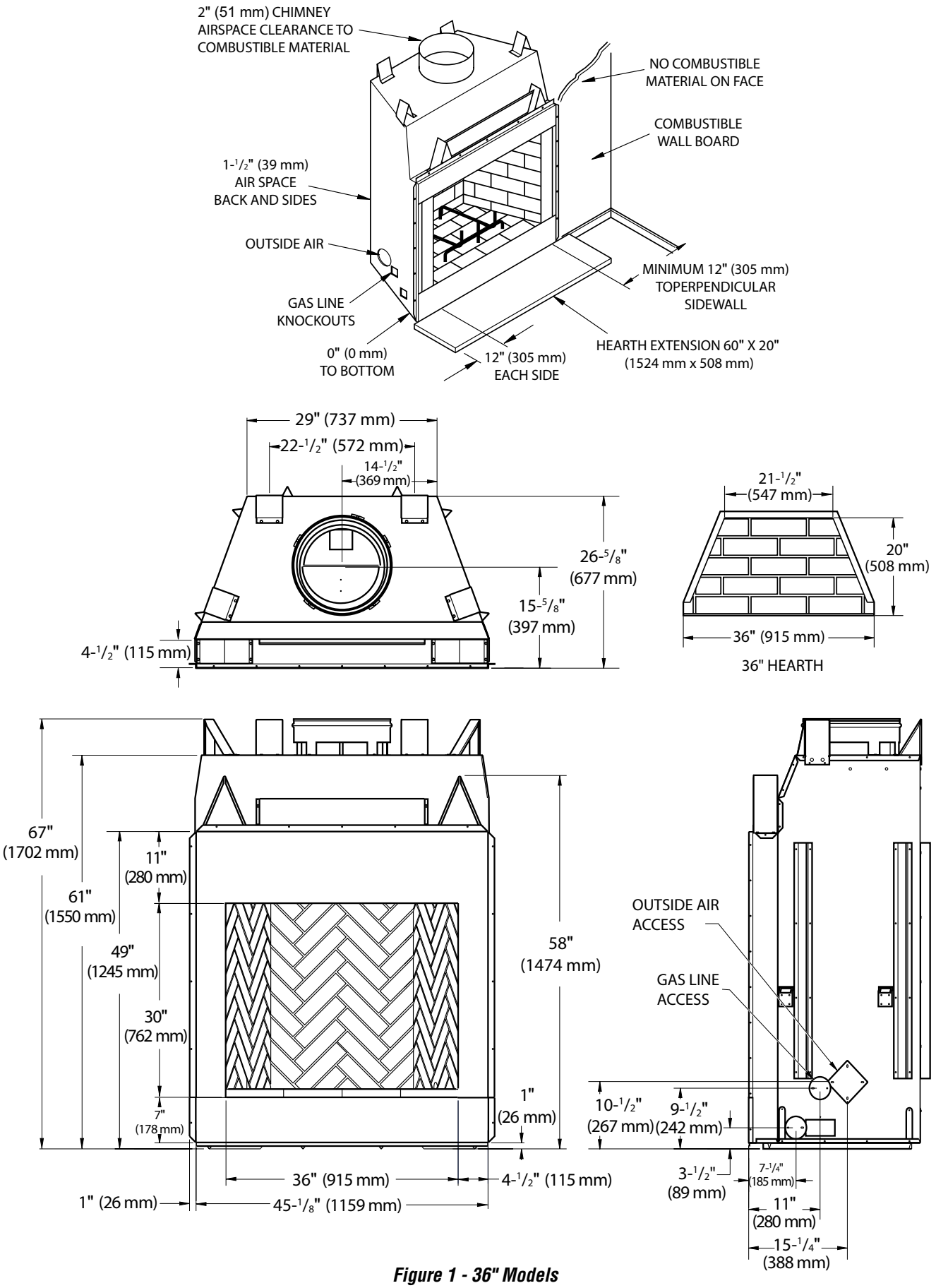

Figure 1 - 36" Models

42" MODEL

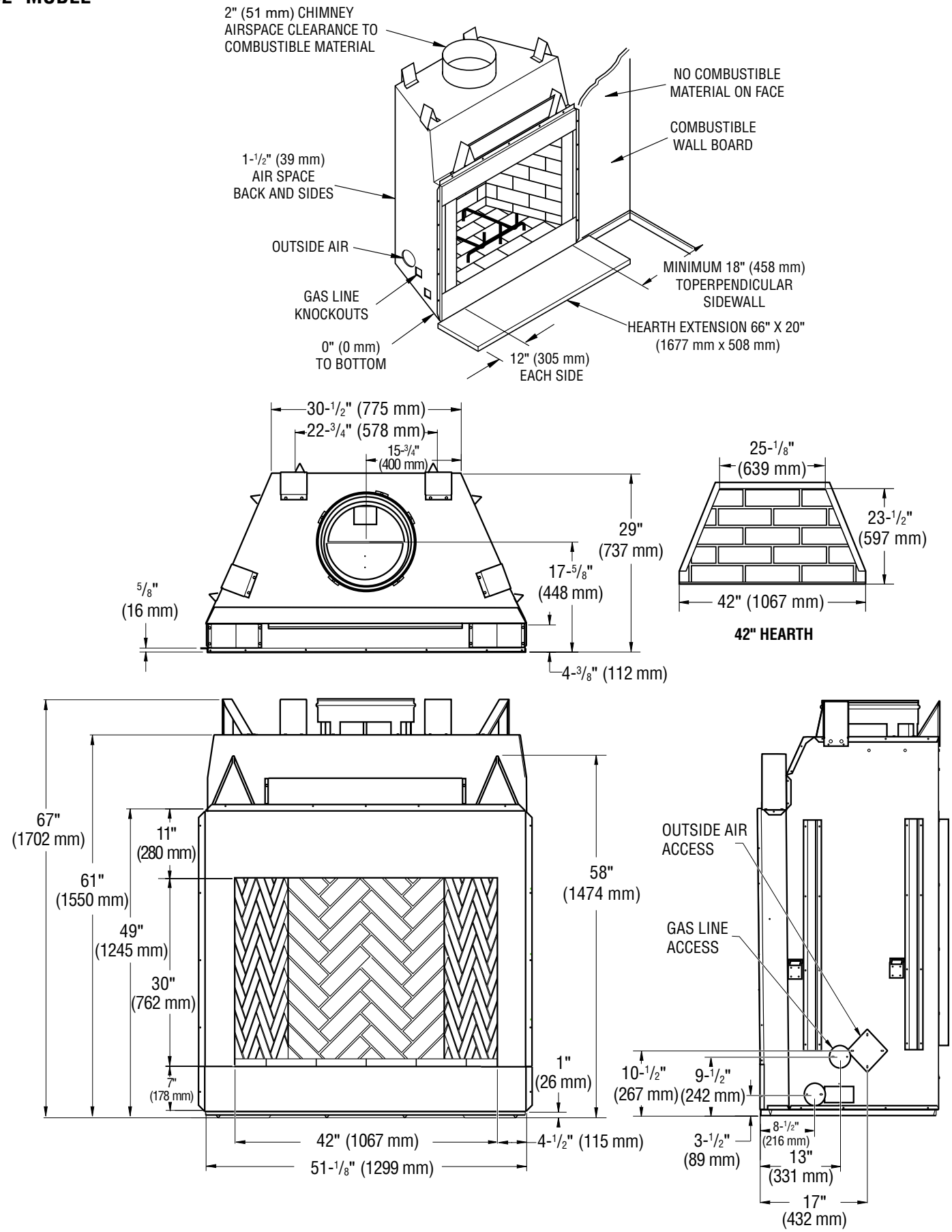

Figure 2 - 42" Models

50" MODEL

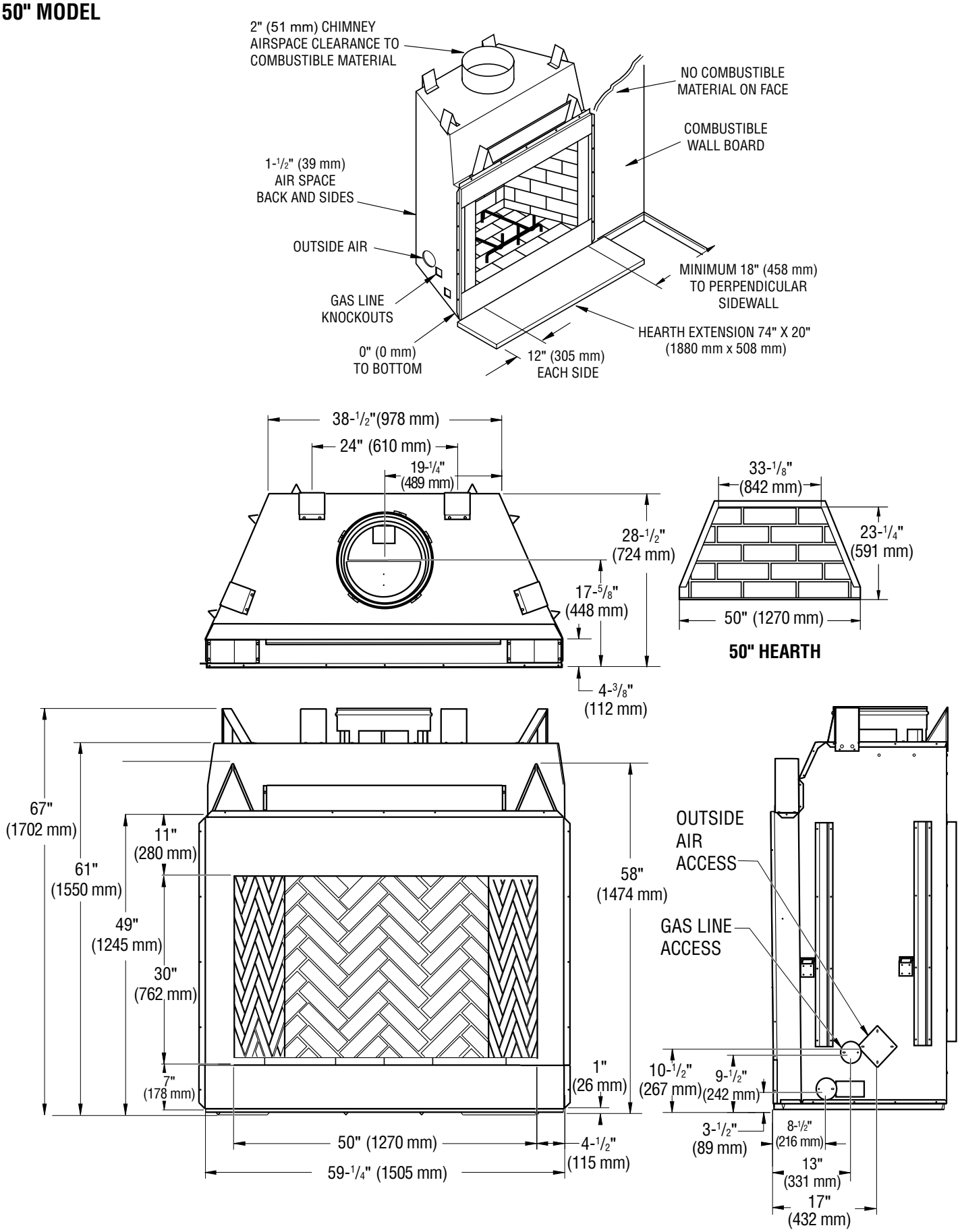

Figure 3 - 50" Models

SELECTING LOCATION

To determine the safest and most efficient location for the fireplace, you must take into consideration the following guidelines:

1. The location must allow for proper clearances (see Figures 4 and 5).
2. Consider a location where fireplace will not be affected by drafts, air conditioning ducts, windows or doors.
3. A location that avoids cutting of joists or roof rafters will make installation easier.
4. An outside air kit is available with this fireplace (see Optional Outside Air Kit on page 9).

MINIMUM CLEARANCE TO COMBUSTIBLES

Back and sides of fireplace *	1-1/2" (39 mm) min.
Ceiling	42" (1067 mm) min.
Front of fireplace	48" (1220 mm) min.
Floor**	0" (0 mm) min.
Perpendicular wall to opening	18" (458 mm) min.
36" Models	12" (305 mm) min.
Top spacers	0" (0 mm) min.
Mantel clearances	see Mantels, page 8
Chimney outer pipe surface 36", 42", 50"	2" (51 mm) min.

* Not required at nailing flanges
** See step 2 of Framing

⚠ WARNING: Do not pack required air spaces with insulation or other materials.

Minimum/Maximum Chimney Height for Residential Installation
Minimum height of chimney, measured from base of fireplace to flue gas outlet of termination, is 16 feet for straight flue or a flue with one elbow set. Maximum distance between elbows is 6 feet. For systems with two elbow sets, minimum height is 22 feet. Maximum height of any system is 50 feet. This measurement includes fireplace, chimney sections and height of termination assembly at level of the flue gas outlet (see Figure 15, page 12).

FRAMING

1. Frame opening for fireplace using dimensions shown in Figures 4 and 5.
2. If fireplace is to be installed directly on carpeting, tile or any combustible material other than wood flooring, fireplace must be installed upon a metal or wood panel extending full width and depth of fireplace.
3. Set fireplace directly in front of this opening and slide unit back until nailing flanges touch side framing.
4. Check level of the fireplace and shim with sheet metal if necessary.
5. Before securing fireplace to prepared framing, ember protector (provided) must be placed between hearth extension (not supplied) and under bottom front edge of fireplace to protect against glowing embers falling through. If fireplace is to be installed on a raised platform, a Z-type ember protector (not supplied) must be fabricated to fit your required platform height. Ember protector should extend under fireplace a minimum of 1 1/2". Ember protector should be made of galvanized sheet metal (28 gauge minimum to prevent corrosion.
6. Using screws or nails, secure fireplace to framing through flanges located on sides of fireplace.

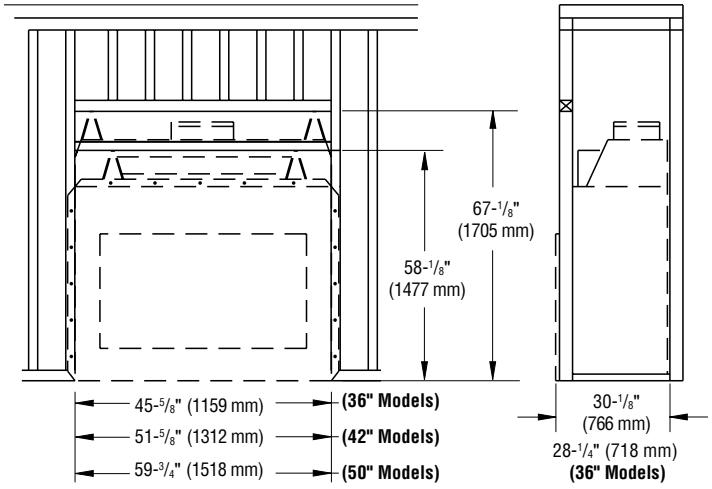

Figure 4 - Framing Dimensions

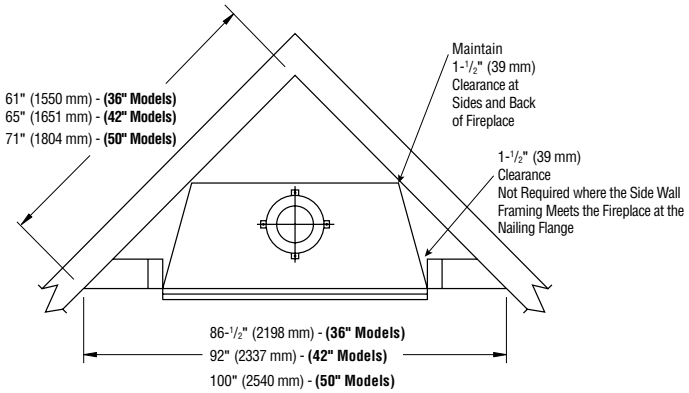

Figure 5 - Corner Installation

HEARTH EXTENSION

A hearth extension projecting a minimum of 20" in front of and a minimum of 12" beyond each side of fireplace opening is required to protect combustible floor construction in front of fireplace. Fabricate a hearth extension using a material which meets the following specifications: a layer of noncombustible, inorganic material having a thermal conductivity of k=0.84 BTU IN/FT, HR. F (or less) at 1" thick. For example, if the material selected has a k factor of 0.25, such as glass fiber, the following formula would apply:

$$\frac{0.25}{0.84} \times 1.0" = 0.30" \text{ thickness required}$$

Thermal conductivity "k" of materials can be obtained from manufacturer or supplier of noncombustible material. If hearth extension is to be covered, use noncombustible material such as tile, slate, brick, concrete, metal, glass, marble, stone, etc. Provide a means to prevent hearth extension from shifting and seal gap between fireplace frame and hearth extension with a noncombustible material (see Figure 6).

⚠ WARNING: Hearth extension is to be installed only as shown in Figure 6.

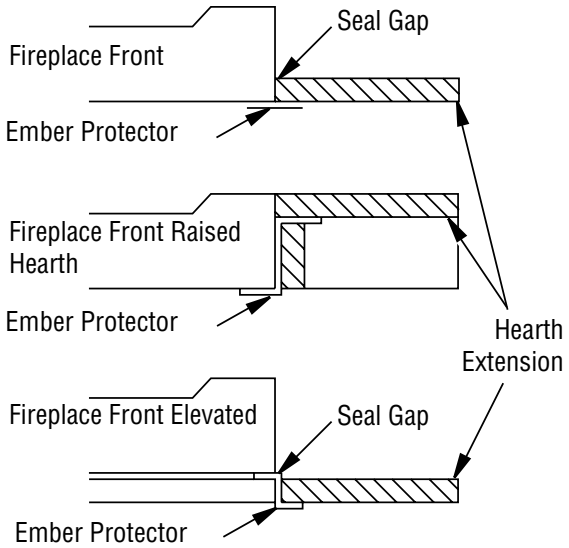

Figure 6 - Hearth Extension

MANTELS

A mantel may be installed if desired (see Figure 7). Woodwork such as wood trims, mantels or any other combustible material projecting from front face must not be placed within 12" (36" Models) or 18" (42/50" Models) of fireplace opening. Combustible materials above 12" (36" Models) or 18" (42/50" Models) and projecting more than 1 ½" from fireplace must not be placed less than 15" (36" Models) or 21" (42/50" Models) from the top opening of the fireplace (NFPA 211, Section - Clearance from Combustible Material).

Mantels or any other combustible material also may come up to side edge of black metal face of fireplace as long as projections from front face fall within limit shown in Figure 7.

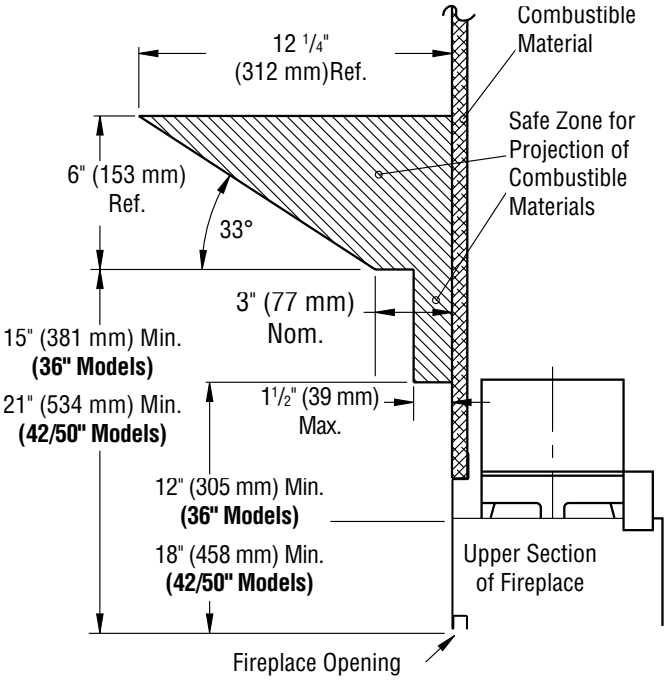

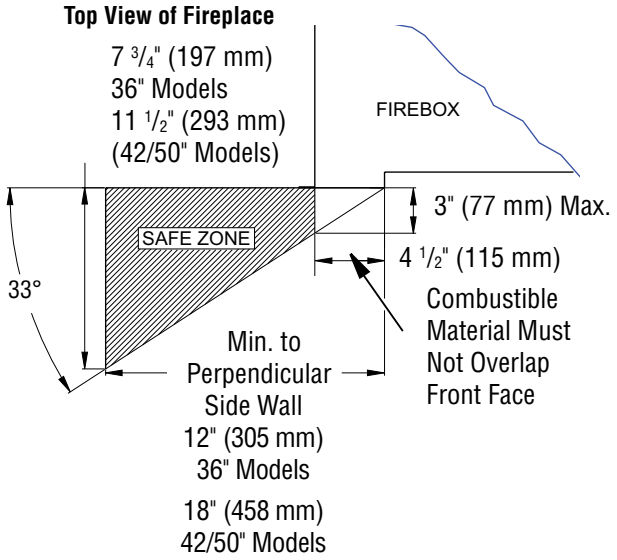

Figure 7 - Mantel Clearances to Combustible Material

OPTIONAL OUTSIDE AIR KIT (MODEL AK4/AK4F)

The installation of an outside air kit should be performed during the rough framing of the fireplace due to the nature of it's location. Outside combustion air is accessed through a vented crawl space (AK4F) or through a sidewall (AK4).

⚠ CAUTION: Combustion air inlet ducts shall not terminate in attic space.

The maximum height for the air vent can not exceed 3 feet below the flue gas outlet of the termination.

Two (2) Outside Air Kits are highly recommended to assure best performance from your fireplace.

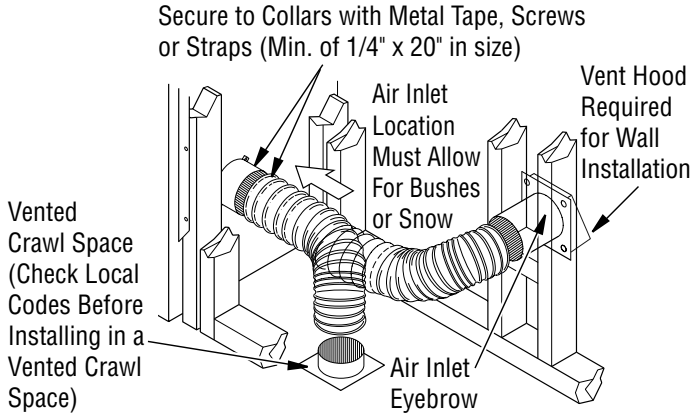

Figure 8 - Outside Air Kit

CHIMNEY PIPE

⚠ WARNING: Label part number 900599-01 must be applied by the installer to all chimney pipe sections but is not required on sections that will be visible after the installation is complete. Label must wrap around the circumference of the pipe. See accessories, page 24 for Kit F2659.

The IHP chimney system consists of 12", 18", 24", 36" and 48" snap-lock, double-wall pipe segments, planned for maximum adaptability to individual site requirements. Actual lengths gained after fitting overlaps must be taken into consideration (lineal gain) and are given in the lineal gain chart (see Figure 9). Lineal Gain is the actual measurable length of a part after two or more parts are connected. For Canada, use chimney parts designated "HT".

⚠ WARNING: The opening in the collar around the chimney at the top of the fireplace must not be obstructed. Never use blown insulation to fill the chimney enclosure.

LINEAL GAIN		
PART NO.	**DESCRIPTION**	**GAIN**
Signature	Fireplace	66 1/2" (1690 mm)
12-12DM 12-12HT	Pipe Section	10 5/8" (270 mm)
18-12DM 18-12HT	Pipe Section	16 5/8" (423 mm)
24-12DM 24-12HT	Pipe Section	23 5/8" (600 mm)
36-12DM 36-12HT	Pipe Section	34 5/8" (880 mm)
48-12DM 48-12HT	Pipe Section	46 5/8" (1185 mm)
RLT-12D RLT-12HT	Round Termination	7 3/4"* (197 mm)
STL-12D	Square Chase-Top with Slip Section	7" (178 mm) to 15"* (381 mm)

* The lineal gain for the terminations is measured to the flue gas outlet height.

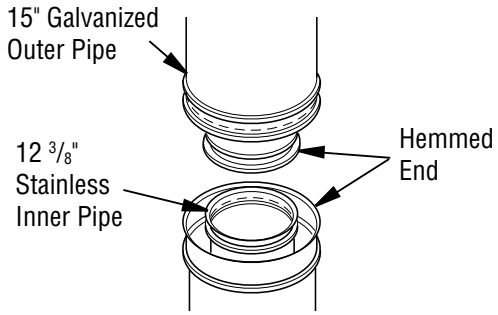

Figure 9 - Lineal Gain

ASSEMBLY AND INSTALLATION OF DOUBLE WALL CHIMNEY SYSTEM

Each double wall chimney section consists of a galvanized outer pipe, a stainless steel inner flue pipe and a wire spacer. The pipe sections must be assembled independently as the chimney is installed. When connecting chimney directly to the fireplace, the inner flue pipe section must be installed first with the lanced side up. The outer pipe section can then be installed over 5 the flue pipe section with the hemmed end up. Press down on each pipe section until the lances securely engage the hem on the fireplace starter. The wire will assure the proper spacing between the inner and outer pipe sections.

Continue to assemble chimney sections as outlined above, making sure that both the inner and outer pipe sections are locked together. When installing double wall snap-lock chimney together, it is important to assure the joint between the chimney sections is locked. Check by pulling chimney upward after locking. The chimney will not come apart if properly locked. It is not necessary to add screws to keep the chimney together (exception, see Figure 10, page 10).

The height of a vertical chimney pipe supported **ONLY** by the fireplace, must not exceed 20 feet. Chimney heights above 20 feet must be supported.

OFFSET	RISE	CHIMNEY LENGTH					
A	B	6"*	12"	18"	24"	36"	48"
4 1/4"	15 3/8"	ELBOW SET ONLY					
6 3/8"	19"	1					
12"	28 3/4"	1	1				
15"	34"	1		1			
18"	39"	1			1		
20 1/2"	43 1/2"	1	1	1			
24"	49 1/2"	1				1	
26 1/2"	54"	1		1	1		
30"	59 3/4"	1					1
32 1/2"	64 1/4"	1		1		1	
35 1/2"	69 1/2"	1	1				1
38 1/2"	74 3/4"	1		1			1
41"	79 1/4"	1	2**				1
44"	84 1/4"	1	1**	1			1
47"	89 1/2"	1	1**		1		1
49 1/2 "	94"	1	2**	1			1
55 1/2"	104 1/4"	1	1**	1	1		1
59"	110 1/4"	1	1**				2
61 1/2"	114 3/4"	1	1**	1		1	1
64 3/4"	120"	1	2**				2
67 3/4"	125 1/4"	1	1**	1			2
70 1/2"	130 1/4"	1	1**		1		2
70 1/2"	130 1/4"	1	1**			2	1
73 1/4"	134 3/4"	1	1**	1		3	
79 1/4"	145 1/4"	1	1**	1		2	1

*** One (1) 6"" pipe section required prior to return elbow any time a pipe section is installed between offset and return elbows.**

**** A minimum quantity of one (1) F0938 12S-12DM or F0959 12S-12HT (required for Canada).**

For systems with two (2) elbow sets, minimum height is 22 feet. Maximum height of any system is 50 feet.

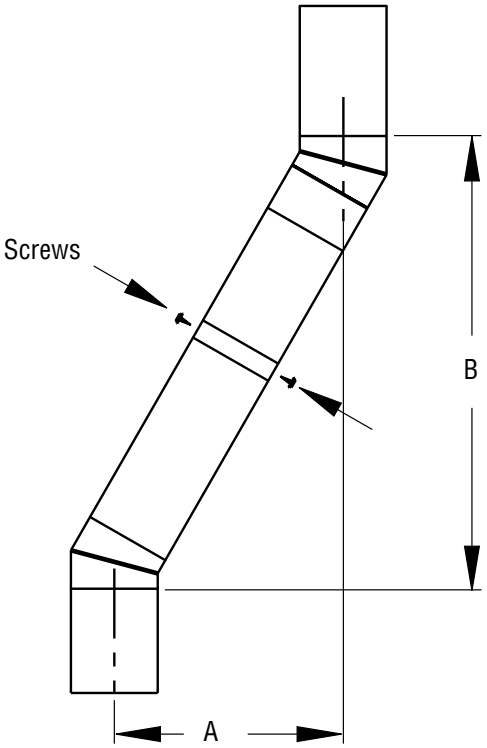

Figure 10 - Elbow Offset

USING ELBOW OFFSETS (30E-12DM)

1. To achieve desired offset, you may install combinations of 12", 18", 24", 36" and 48" length of double wall pipe (see offset chart and Figure 10).
2. Chimney weight above offset rests on return elbow. Straps must be securely nailed to rafters or joists (see Figure 11, details A and B).
3. Maximum length of pipe between supports (return elbow 12S-12DM) is 6' of angle run. Maximum of two 6' angle run sections or 12S-12HT system (see Figure 12, page 11).
4. All pipe connections between the offset and return must be secured with two screws on the outer pipe only (see Figure 10). Do not penetrate the inner stainless.
5. One (1) 6" pipe section (included with offset elbow F5169 and F5170) must be installed prior to return elbow any time a pipe section is installed between offset and return elbows.

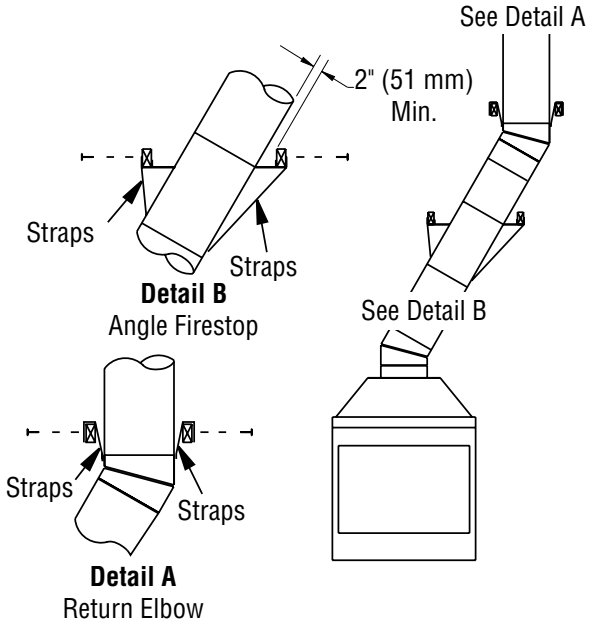

Figure 11 - Ceiling Support Pipe 12S-12DM

⚠ CAUTION: THE STRUCTURAL INTEGRITY OF THE MANUFACTURED HOME FLOOR, WALL, AND CEILING/ ROOF MUST BE MAINTAINED.

⚠ WARNING: DO NOT INSTALL IN SLEEPING ROOM OF MOBILE HOMES.

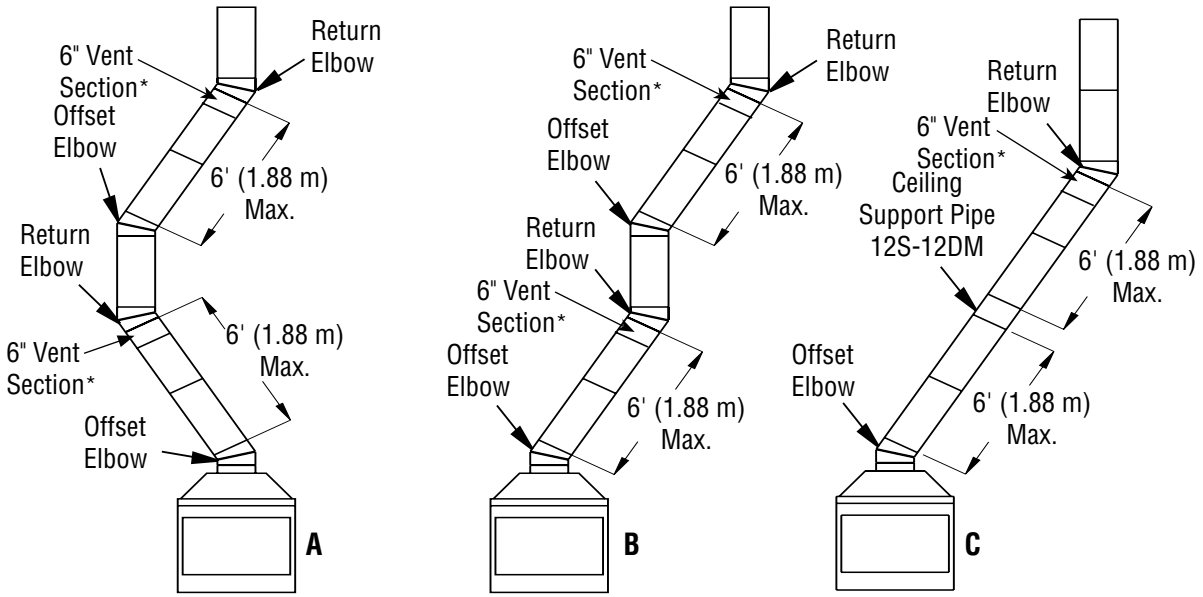

***included with F5169 and F5170 Offset and Return Elbow**

Figure 12 - Typical Offset Terminations

FIRESTOP SPACER 36", 42" AND 50" (FS-10)

Firestop spacers are required at each point where the chimney penetrates a floor space. Their purpose is to establish and maintain the required clearance between the chimney and the combustible materials. When the pipe passes through a framed opening into a living space above, the firestop must be placed onto the ceiling from below as shown in Figure 13.

They also provide complete separation from one floor space to another or attic space as required by most codes. When the double wall pipe passes through a framed opening into an attic space, the firestop must be placed into an attic floor as shown in Figure 14.

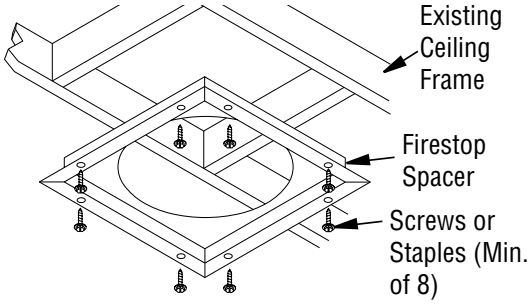

Figure 13 - Firestop Spacer with Living Space Above Ceiling

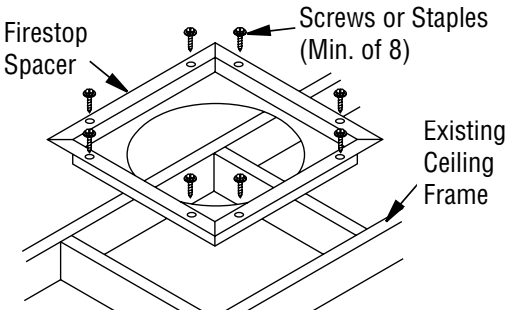

Figure 14 - Firestop Spacer with Attic Space Above Ceiling

IMPORTANT NOTICE

When penetrating a ceiling into an attic, a firestop and thimble are required to avoid intrusion by insulation and recommended to negotiate a joist.

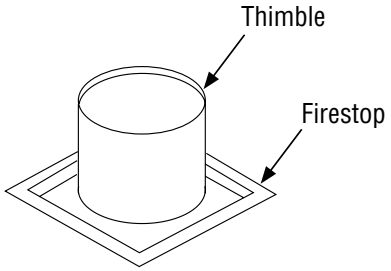

Figure 14a - Thimble

PENETRATING ROOF

To maintain a 2" (36"/42"/50" Models) clearance to the pipe on a roof with a pitch, a rectangular opening must be cut.

1. Determine center point through which pipe will penetrate roof.
2. Determine center point of roof. Pitch is distance the roof drops over a given span, usually 12". A 6/12 pitch means that roof drops 6" for each 12" measured horizontally down from roof rafters.
3. Use roof opening chart (Figure 15, page 12) to determine correct opening length and flashing required.
4. Remove shingles around opening measured. Cut out this section.
5. Add next sections of pipe until end penetrates roof line. Check to see that proper clearances are maintained. Extend chimney by adding sections of double wall pipe until pipe is minimum of 30" above highest point of roof cutout. Termination and chimney must extend a minimum of 36" above highest point where it passes through roof.

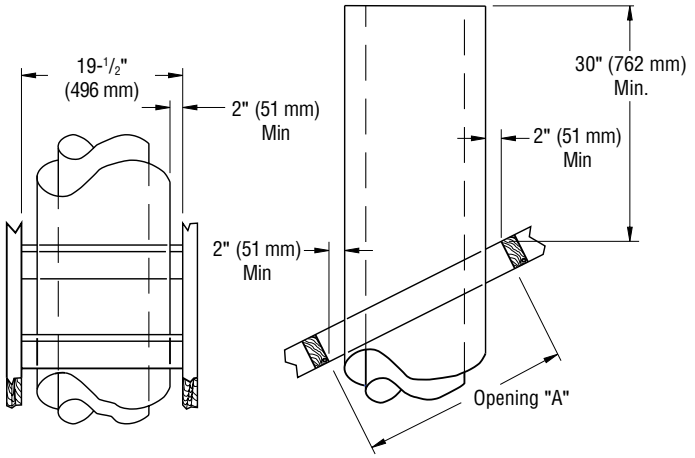

Pitch	Slope	Opening "A" Max.	Used Flashing Model No.
Flat	0°	19-1/2" (496 mm)	V6F-10DM
0-6/12	26.6°	22" (559 mm)	V6F-10DM
6/12-12/12	45.0°	27" (432 mm)	V12F-10DM

Roof Opening 36", 42" and 50" Models

Figure 15 - Roof Opening Measurements

FLASHING INSTALLATION (V6F-10DM OR V12F-10DM)

Determine the flashing to be used with the roof opening chart. Slide flashing over pipe until base is flat against roof. Replace as many shingles as needed to cover exposed area and flashing base. Secure in position by nailing through shingles (see Figure 16). DO NOT NAIL THROUGH FLASHING CONE.

Installing Flashing on a Metal Roof

When installing the flashing on a metal roof, it is required that putty tape be used between the flashing and the roof. The flashing must be secured to the roof using #8 x 3/4" screws and then sealed with roof coating to prevent leakage through the screw holes. A roof coating must also be applied around the perimeter of the flashing to provide a proper seal.

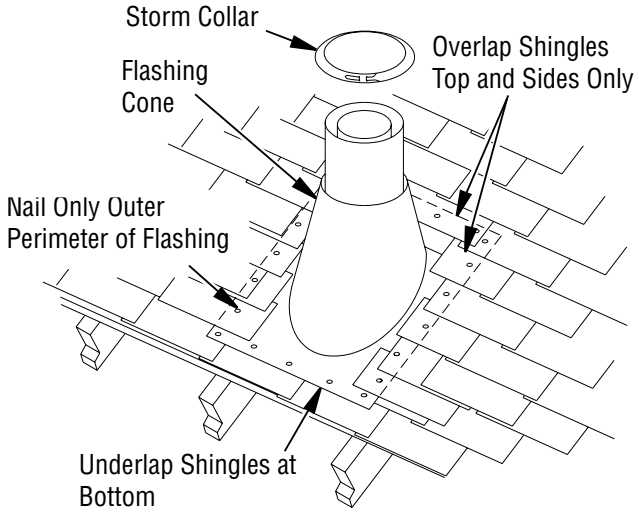

Figure 16 - Flashing Installation

Storm Collar Installation (SC2-1)

Place storm collar over pipe and slide down until it is snug against the open edge of the flashing (see Figure 17). Apply waterproof caulk around the perimeter of the collar to provide a proper seal.

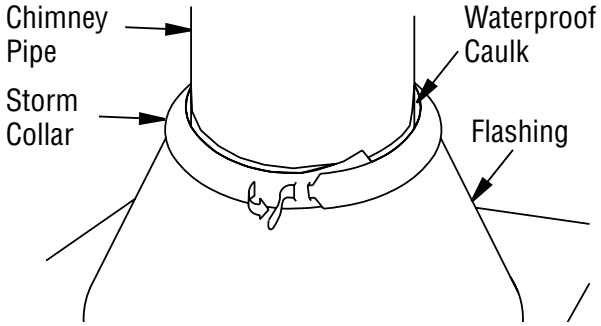

Figure 17 - Storm Collar

Terminations/Spark Arrestor

The fireplace system must be terminated with the listed round top or chase terminations. In any case, refer to the installation instructions supplied with the termination.

⚠ CAUTION: Do not seal openings on the rooftop flashing. Follow the installation instructions provided with the termination being used.

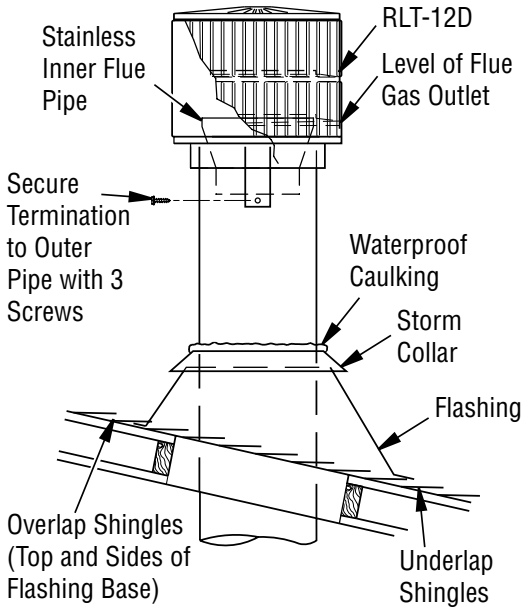

Figure 18 - Termination

CHASE INSTALLATIONS

Instructions for chase installations are included with the chase style termination chosen. In a multiple chase installation, be sure to provide adequate distance between terminations to prevent smoke spillage from one termination to another. We suggest that terminations be separated at least 24", center to center and stacked at a vertical height difference of 18" (see Figure 19).

Note: If a decorative shroud is to be installed, contact the manufacturer for specifications.

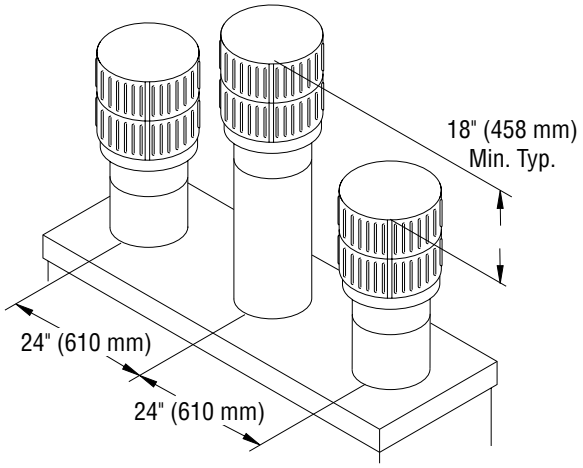

Figure 19 - Multiple Chase Installation

10 FOOT RULE

All flue gas outlet chimney terminations must extend a minimum of 3 feet in height above the highest point where it passes through the roof and must be at least 2 feet above the highest point of the roof that is within a horizontal distance of 10 feet (see Figure 20).

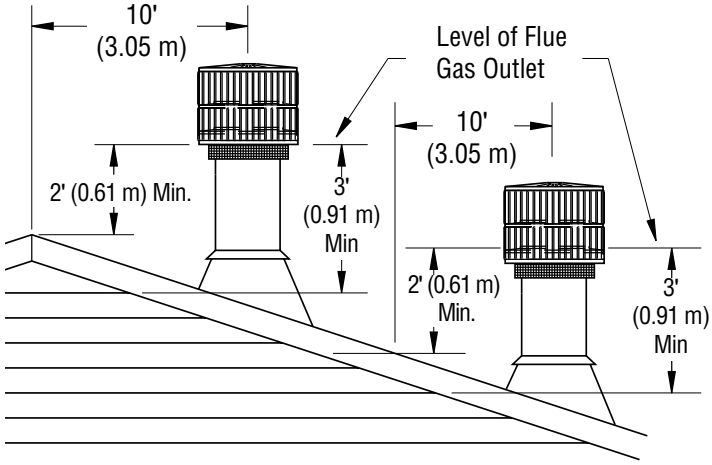

Figure 20 - 10 Foot Rule

SQUARE TOP TERMINATIONS INSTALLATION STL-12D AND STL-12DMP

1. Construct chase as illustrated in Figure 21. ***Note:*** The shortest vertical side must be at least 30" high and minimum inside dimension must be at least 19" as shown in Figure 21.
2. Add pipe sections to chimney system as outlined in fireplace installation instructions until last piece of chimney is a maximum of 6" below top of chase (see Figure 21).

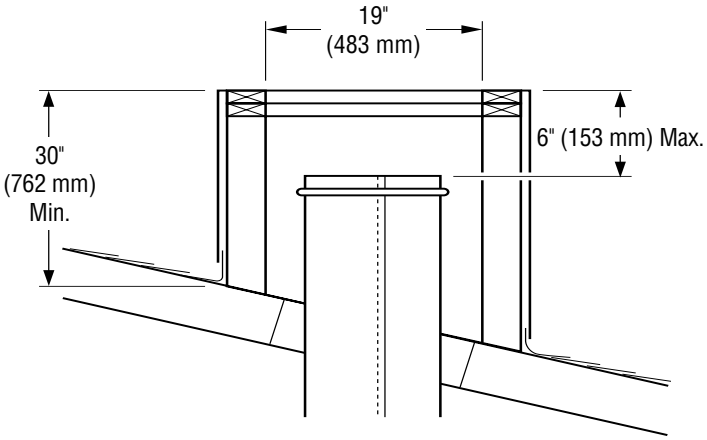

Figure 21 - Constructing Chase

3. Fabricate a flashing having a 16-1/2" diameter hole centered over chimney end with a 2" collar around hole (see Figure 22). Attach noncombustible spacers at each corner and place flashing over chase.
4. Secure flashing through sides with 8-penny nails or sheet rock screws.
5. Place galvanized sleeve through hole in flashing and around last section of chimney (see Figure 23).
6. Place termination cap over opening and slip stainless steel inner pipe into stainless steel chimney section. Lower termination assembly until cap rests evenly over flashing hole. Secure cap at each corner with sheet metal screws (see Figure 24).

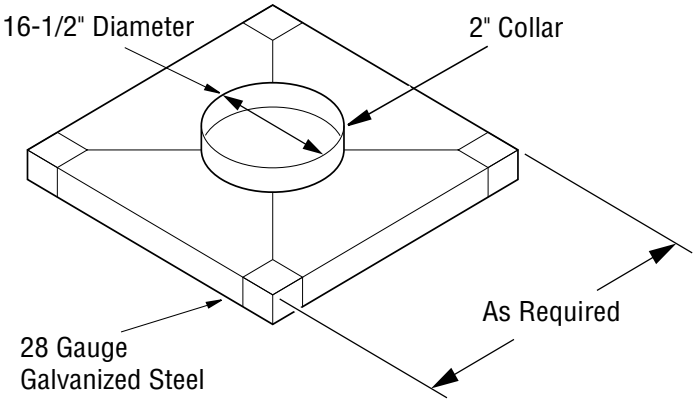

Figure 22 - Constructing Chase Top Flashing

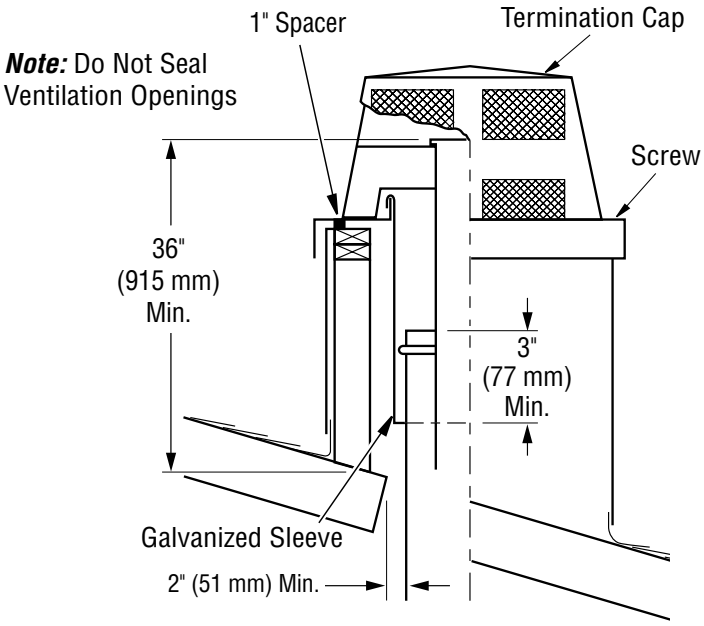

Figure 23 - Installing Termination Cap

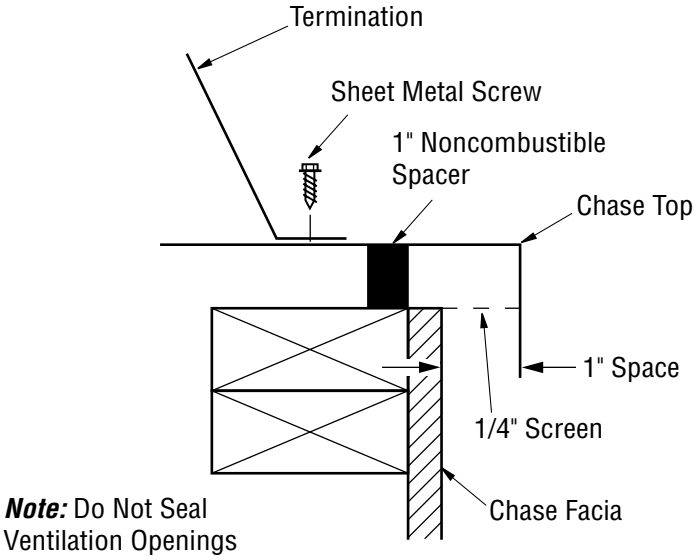

Figure 24 - Securing Termination to Chase Top Flashing with Sheet Metal Screws

ROUND TOP TERMINATIONS INSTALLATION RLT-12D, AND RLT-12HT

1. Construct chase as illustrated in Figure 25. ***Note:*** The shortest vertical side must be at least 30" high and the minimum inside dimension must be at least 19" as shown in Figure 25.
2. Add pipe sections to chimney system as outlined in fireplace installation instructions until the last piece of chimney is a minimum of 6" above chase top (see Figure 25).
3. Fabricate a flashing having a 16-1/2" diameter hole centered over chimney end with a 2" collar around hole (see Figure 26, page 15).
4. Attach noncombustible spacers at each corner and place flashing

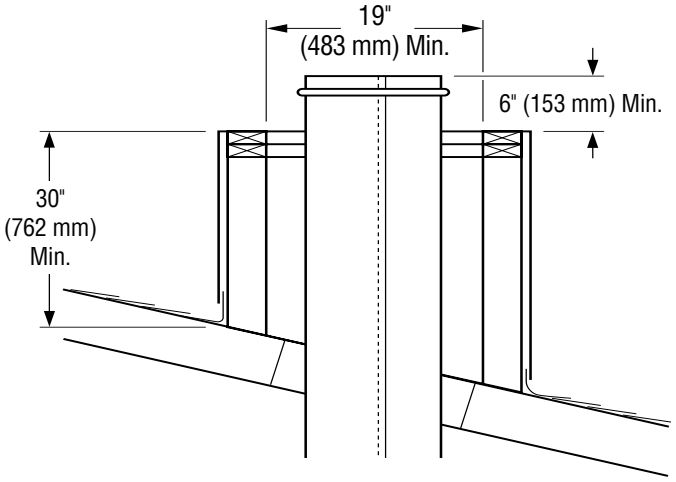

Figure 25 - Constructing Chase

over chase (see Figure 27). Secure flashing through sides with 8-penny nails or sheet rock screws.

5. Place termination cap over opening. Slip stainless steel inner pipe of termination into inner stainless steel chimney section (see Figure 28). Place galvanized steel over chimney outlet (see Figure 29).
6. Attach storm collar where chimney pierces opening in flashing. Caulk where storm collar touches outer chimney pipe (see Figure 29).

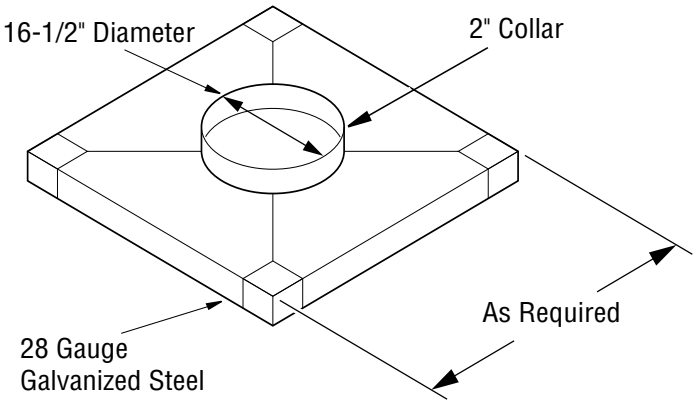

Figure 26 - Constructing Chase Top Flashing

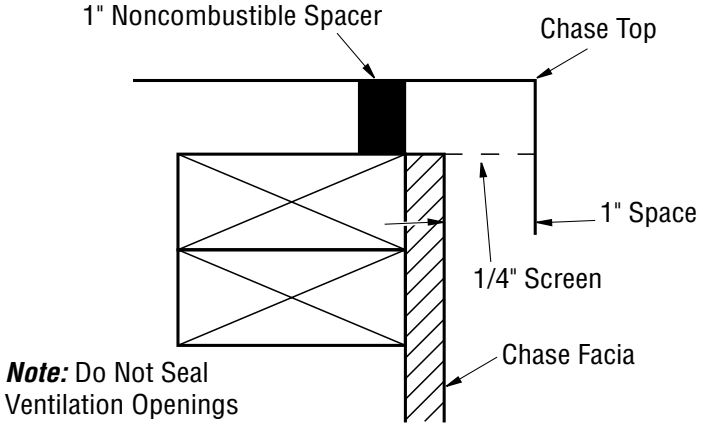

Figure 27 - Chase Top Flashing

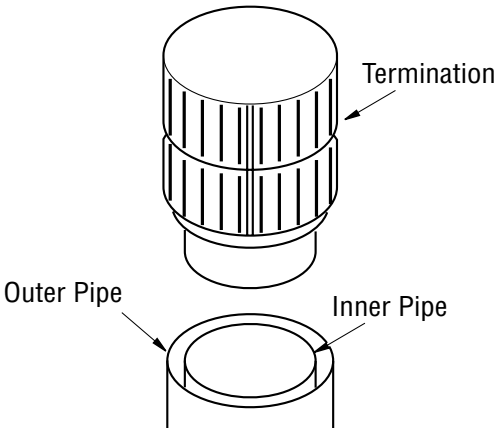

Figure 28- Installing Termination Cap

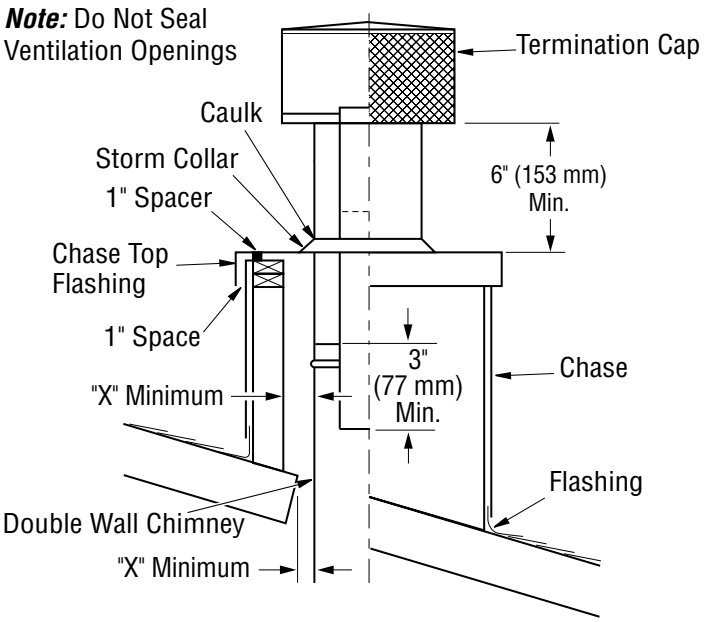

Figure 29 - Chase Installation

NONCHASE INSTALLATION

1. Slip on proper pitch roof flashing and mount storm collar above it. Caulk top of storm collar where it contacts outer chimney pipe.
2. Mount round top termination and secure it to outer chimney pipe with 3 sheet metal screws.

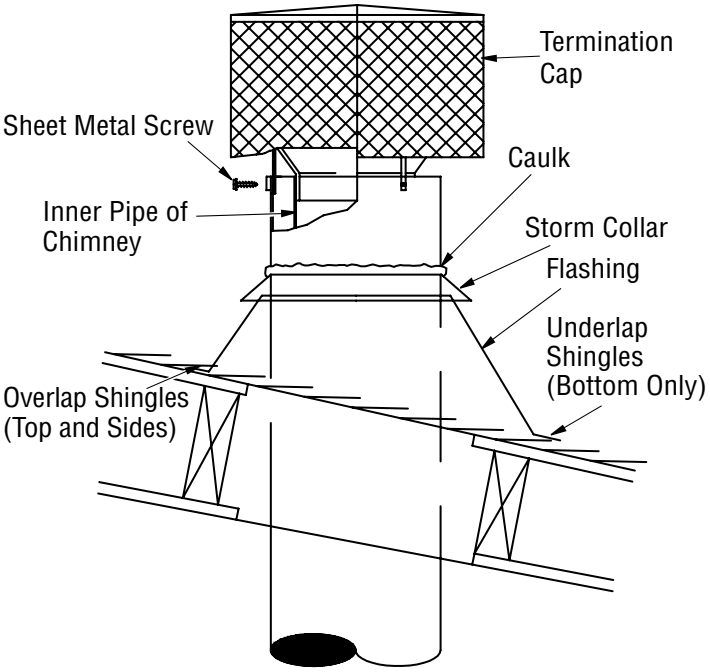

Figure 30 - Non-Chase Installation

FINISHING FIREPLACE

Combustible materials, such as wallboard, sheet rock, drywall, plywood, etc. may make direct contact with sides and top around the fireplace face. It is important that combustible materials do not overlap the face itself. Brick, glass, tile or other noncombustible materials may overlap the front face provided they do not obstruct essential openings like louvered slots or any other opening. When overlapping with a noncombustible facing material, use only noncombustible mortar or adhesive.

⚠ WARNING

LIFTING HAZARD
SINGLE -PERSON LIFT COULD CAUSE INJURY.
USE ASSISTANCE WHEN MOVING OR LIFTING.

IMPORTANT: Installation of Refractory panels should be done after the fireplace is placed in a permanent location.

1. Remove grate, screen assemblies and all hardware components out of the firebox. The bottom panel is pre-installed in the firebox. Make sure the bottom refractory panels is centered in the firebox and flush with the front of the fireplace.
2. Place cardboard on top of bottom refractory panel as a protection to prevent shipping and scratching during installation of the other panels.
3. Position "Z" shaped grate retaining brackets on top of the notched area toward the rear of the bottom refractory. They should be positioned a distance apart as shown in Figure 31.
4. Install rear refractory panel. This panel has a top and bottom. To determine which is which, match up the pattern on the rear panel with the left and right sides before installing the rear panel. Make sure panel is center before continuing.
5. Install the right and left refractory panels with the gas line knock-outs orientated down toward the bottom refractory. Align the left and right panels with the rear panel so the grout lines line up.
6. Install the upper corner brackets and tighten set screws (Figure 32).
7. Install grate by placing rear legs into slots in the grate retainers (Figure 32).

⚠ WARNING: Risk of fire! Replace grate with INNOVATIVE HEARTH PRODUCTS grate only (see Parts, pages 19 and 20). This grate has been designed to keep the operation of your fireplace safe and efficient.

INSTALLING SCREEN

1. Slide round end of screen rod into rings at top of screen. Attach one push-on nut to end of rod before attaching last ring of screen.
2. Bend tab on both sides with the hole down to insert the round end screen rod into hole on the left and right side of smoke shelf (Figure 33).
3. Mount flat end of screen rod with #10 x 5/8" to center of smoke shelf.
4. Install other screen rod in same manner.

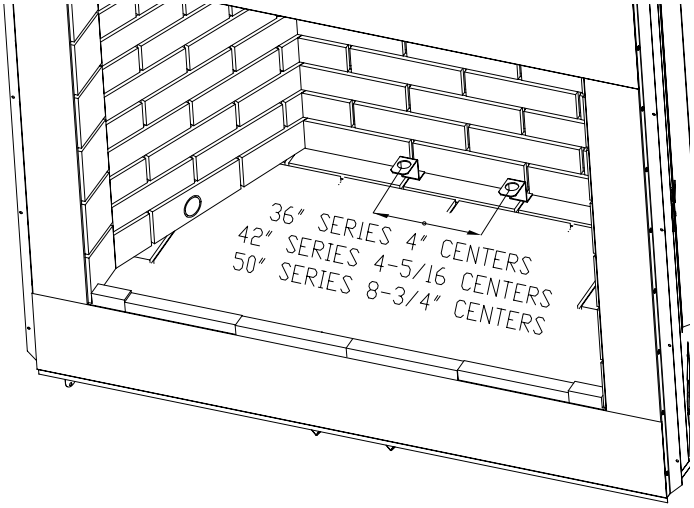

Figure 31 - Installing Grate Retainers

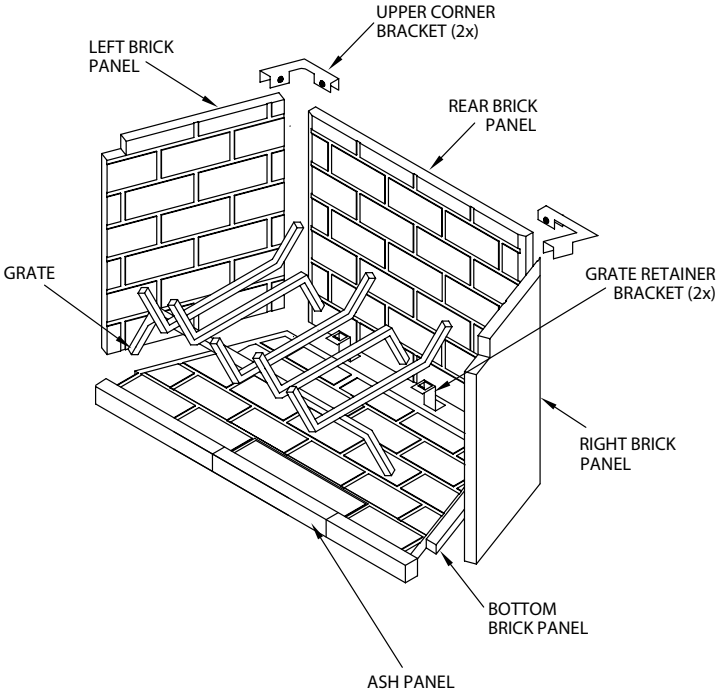

Figure 32 - Installing Refractory Panels

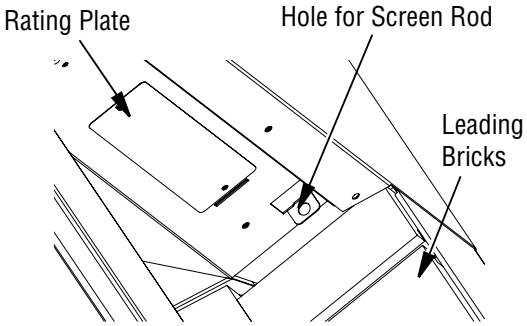

Figure 33 - Installing Fireplace Screen

OPTIONAL GAS LINE INSTALLATION

Gas line hook up should be done by your supplier or a qualified service person.

Note: Before you proceed, make sure your gas supply is turned off. Use only a 1/2" black iron pipe and appropriate fittings.

1. Remove knockout indentation on refractory or firebrick wall located above refractory hearth floor. Knockout indentation must be firmly tapped with any solid object such as a 1/2" dowel until it is released. Remove fragmented portions of refractory (see Figure 34).
2. Remove gas line cover plate located on either side of fireplace and pull out insulation from gas line conduit sleeve. Save insulation for reuse. Replace screws.
3. Run a 1/2" black iron gas line into fireplace through the rear at gas line conduit sleeve (if using a raised platform, add height). Provide sufficient gas line into fireplace chamber for fitting connection (see Figure 35).

   Note: Secure incoming gas line to wood framing to provide rigidity for threaded end.
4. Repack insulation around gas line and into sleeve opening. Seal any gaps between gas line and refractory knockout hole with refractory cement or commercial furnace cement, Install the gas appliance or cap-off gas line if desired.

⚠ CAUTION: All gas piping and connections must be tested for leaks after the installation is completed. After ensuring that the gas valve is on, apply soap and water solution to all connections and joints. Bubbles forming show a leak. Correct all leaks at once. DO NOT USE AN OPEN FLAME FOR LEAK TESTING AND DO NOT OPERATE ANY APPLIANCE IF A LEAK IS DETECTED. LEAK TESTING SHOULD BE DONE BY A QUALIFIED SERVICE PERSON.

⚠ WARNING: Do not operate an unvented gas log set in this fireplace with the chimney removed.

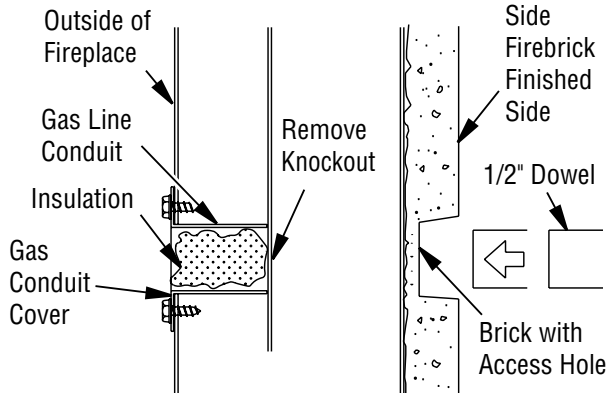

Figure 34 - Gas Line Access

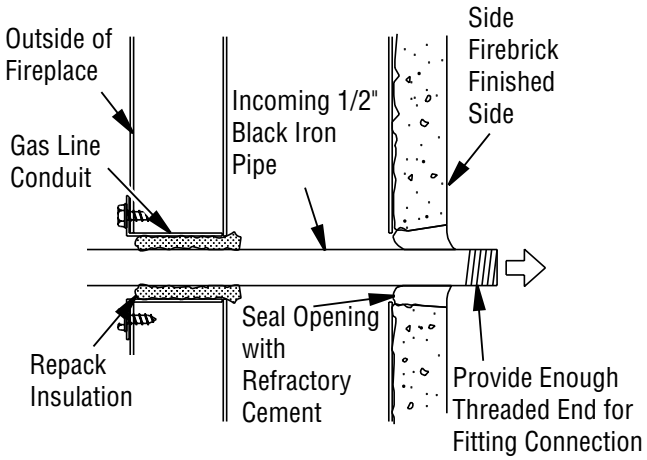

Figure 35 - Gas Line Installation

A gas line or gas log lighter may be installed for the purpose of installing a vented or vent-free decorative gas appliance incorporating an automatic shutoff device and complying with the Standard for Decorative Gas Appliances for Installation in Vented Fireplaces, ANSI Z21.60 or American Gas Association draft requirements for Gas Fired Log Lighters for Wood-burning Fireplaces, Draft NO. 4 dated August, 1993.

If you install a decorative gas appliance (vented gas log), the decorative gas appliance must comply with the Standard for Decorative Gas Appliance for Installation in Solid Fuel Burning Fireplaces, ANS Z21.60 or Z21.84 and shall also be installed in accordance with the National Fuel Gas Code, ANSI 7223NFPA 54 latest edition.

If you wish to install an unvented (vent-free) gas log set, only unvented gas log sets which have been found to comply with the standard for unvented room heaters, ANSI Z21.11.2 are to be installed in this fireplace.

⚠ WARNING: If the fireplace has been used for wood-burning, the firebox and chimney must be cleaned of soot, creosote and ashes be a qualified chimney cleaner. Creosote will ignite if heavily heated.

⚠ WARNING: When using a decorative vented gas log, the damper must be removed or permanently locked in the fully open position and the glass doors must be in the fully open position.

GLASS DOORS

Glass doors are optional with the fireplace. When fireplace is in operation, doors must be fully opened or fully closed position only or a fire hazard may be created (see Figure 40).

A fireplace equipped with glass doors operates much differently than a fireplace with an open front. A fireplace with glass doors has a limited amount of air for combustion.

Excessive heat within the fireplace can result if too large a fire is built or if combustion air gate is not completely open. The following tips should be followed to assure that both the fireplace and glass door retain their beauty and function properly. Both the flue damper and glass doors must be fully opened before starting fire. This will provide sufficient combustion air and maintain safe temperatures in firebox.

IMPORTANT: The glass must be allowed to warm slowly and evenly. The tempered glass will withstand a gradual temperature rise to 550° F, which is more than a normal fire will generate. Such materials as pitch/wax laden logs, very dry mill end lumber and large amounts of paper or cardboard boxes can create an excessively hot fire and should not be burned in this fireplace. Always keep the fire well back from the doors and never allow flames to contact the glass.

GLASS DOOR ADJUSTMENT

Remove doors and slightly loosen lower pivot clips and upper spring clips. Replace doors and fully close them. Use 1/8" metal shims to level doors. Once proper setting is achieved, carefully open doors enough so that you can access spring clips with a Phillips screwdriver. Tighten screws. See Figure 39.

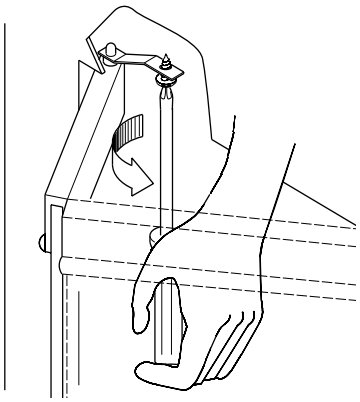

Figure 39 - Adjusting Bi-Fold Doors

⚠ WARNING: Fireplaces equipped with glass doors should be operated only with doors fully opened or doors fully closed. Doors, if left partly open, may draw gas and flame out of the fireplace opening creating risks of both fire and smoke.

⚠ WARNING: Do not slam or strike doors. Damage can result in a hazardous condition.

⚠ WARNING: Discontinue use of the appliance immediately if doors are damaged and contact a qualified installer for repair. Only doors certified with the appliance shall be used.

CLEANING GLASS

Clean glass with any commercial glass cleaner or soap and water. Do not use any abrasive material to clean glass. Do not clean glass with any cool water if glass is still hot from the fire and smoke.

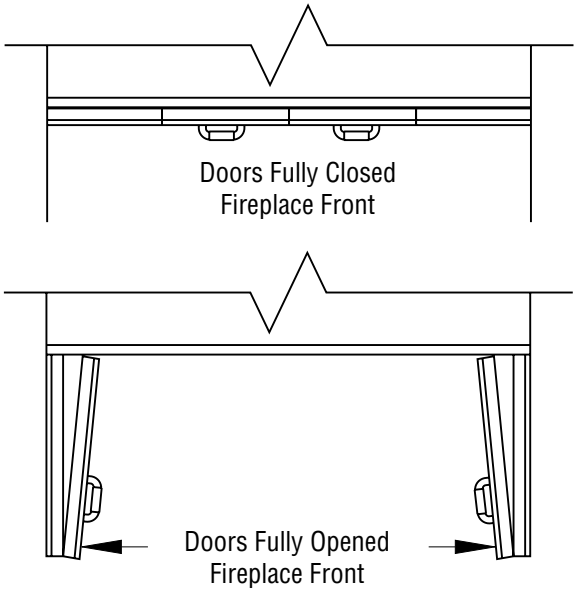

Figure 40 - Bi-Fold Glass Doors

DAMPER HANDLE OPERATION

The damper handle, which opens and closes the damper blade, is located in the upper front face of the fireplace. Pushing the handle forward and up through the keyway slot will free damper blade to-automatically open. Pushing the handle forward and down will lock damper blade closed (see Figure 41). Damper must be locked in the full open position before operating fireplace (see Figure 41).

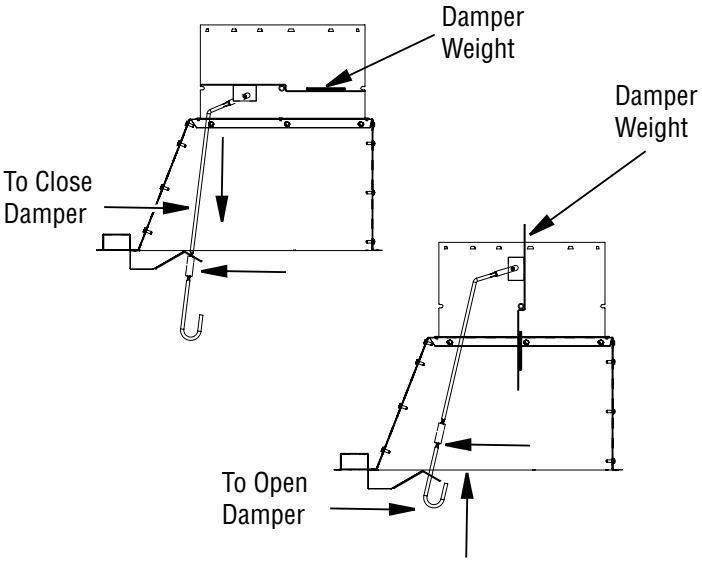

Figure 41 - Operating Damper Handle

PARTS

MODEL	CATALOG NO.
WRT4536WS	F0626
WRT4536WH	F0627
WRT4542WS	F0628
WRT4542WH	F0629
WRT4550WS	F0630
WRT4550WH	F0631

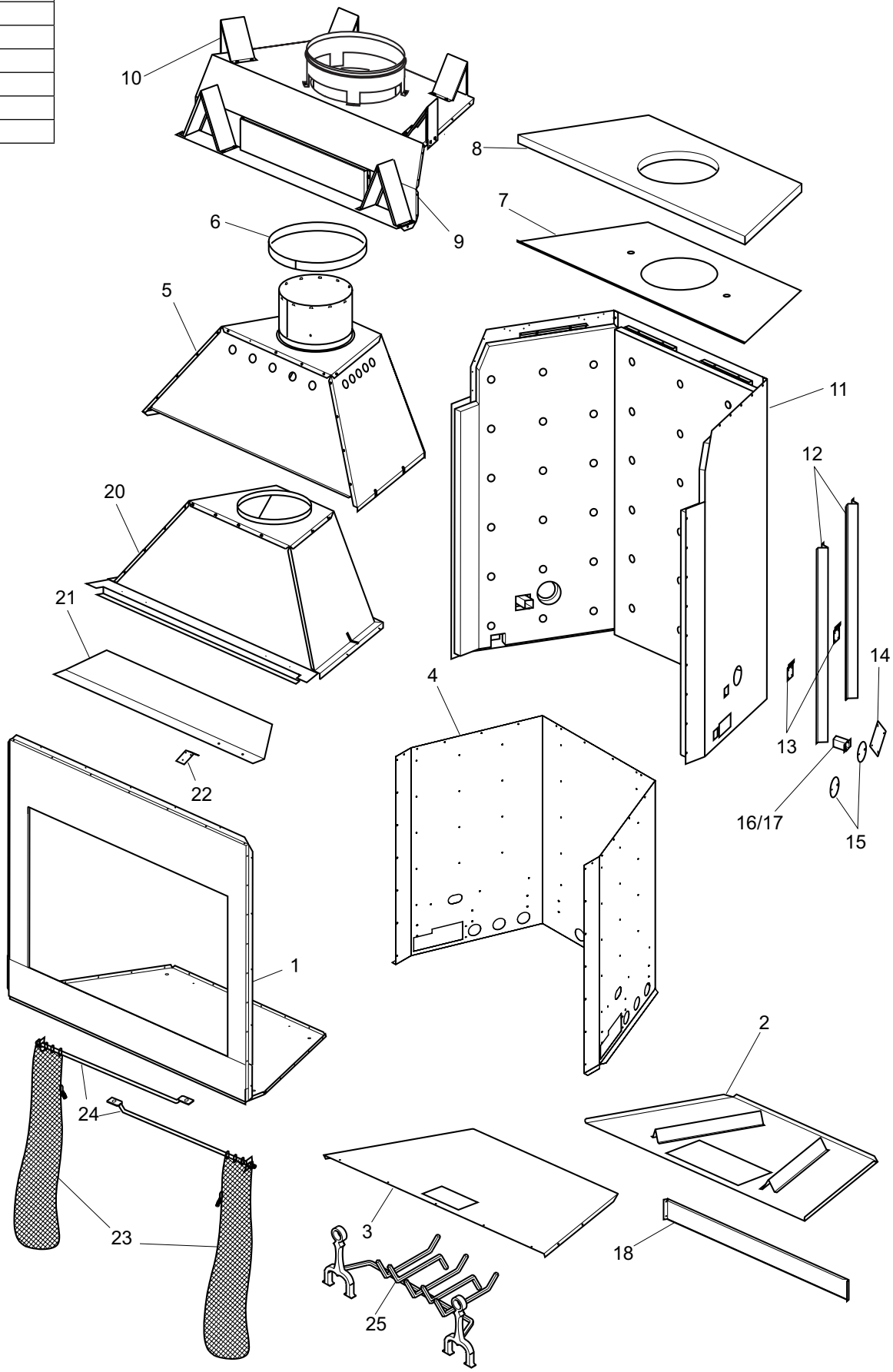

PARTS

This list contains replaceable parts used in your firebox. When ordering parts, follow the instructions listed under Replacement Parts on page 25 of this manual.

⚠ WARNING: Contact an IHP dealer to obtain any of these parts. Never use substitute materials not approved by IHP. Use of non-approved parts can result in poor performance and safety hazards.

KEY NO.	CATALOG NO.	DESCRIPTION	WRT4536	WRT4542	WRT4550	QTY.
1	**	Face Assembly	•	•	•	1
2	**	Firebox Bottom Assembly	•	•	•	1
3	**	Firebox Bottom	•	•	•	1
4	**	Firebox Surround	•	•	•	1
5	**	Outer Dome Assembly	•	•	•	1
6	**	Insulation Pan Support	•	•	•	1
7	**	Insulation Pan	•	•	•	1
8	**	Top Insulation	•	•	•	1
9	**	Fireplace Top Assembly, 36"	•			1
	**	Fireplace Top Assembly, 42"		•		1
	**	Fireplace Top Assembly, 50"			•	1
10	J6997	Standoff	•	•	•	4
11	**	Fireplace Surround Assembly	•	•	•	1
12	J4362	Clearance Spacer	•	•	•	6
13	J5329	Fireplace Handle Bracket	•	•	•	4
14	J6900	Outside Air Cover Plate	•	•	•	2
15	J6934	Gas Conduit Cover	•	•	•	4
16	J4368	Conduit One	•	•	•	2
17	J4369	Conduit Two	•	•	•	2
18	**	Heat Shield Support	•	•	•	1
19	N/A	N/A	-	-	-	N/A
20	**	Inner Dome Assembly	•	•	•	1
21	**	Smoke Shield	•	•	•	1
22	**	Damper Control Bracket	•	•	•	1
23	J4342	Screen 36"	•			2
	J4341	Screen 42"		•		2
	J4340	Screen 50"			•	2
24	J6928	Screen Rod 36"	•			2
	J4391	Screen Rod 42"		•		2
	J4390	Screen Rod 50"			•	2
25	J4347	Grate 36"	•			1
	J4346	Grate 42"		•		1
	J4345	Grate 50"			•	1
		PARTS AVAILABLE NOT SHOWN				
	J3938	Grate Retainer	•	•	•	2
	J4357	Side Firebrick Wall Spacers	•	•	•	4
	RP114913-01	Rear Firebrick Wall Spacers	•	•	•	2
	F1882	Paint, Black Textured 12 oz. Can	•	•	•	1

** Not a field replaceable part.

⚠ WARNING

LIFTING HAZARD
SINGLE -PERSON LIFT COULD CAUSE INJURY.
USE ASSISTANCE WHEN MOVING OR LIFTING.

IMPORTANT: Installation of refractory panels should be done after the fireplace is placed in a permanent location.

MODEL	CATALOG NO.
WRT4536WS	F0626
WRT4536WH	F0627
WRT4542WS	F0628
WRT4542WH	F0629
WRT4550WS	F0630
WRT4550WH	F0631

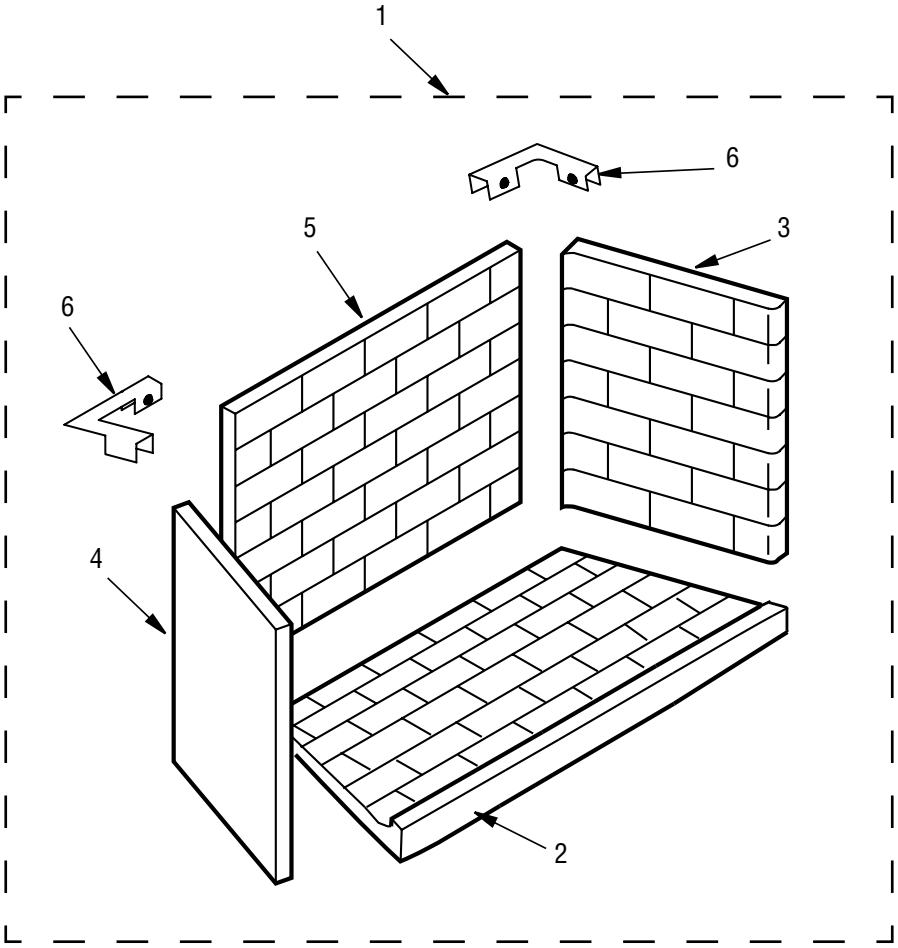

Stacked Refractory Shown

PARTS

This list contains replaceable parts used in your firebox. When ordering parts, follow the instructions listed under Replacement Parts on page 25 of this manual.

⚠ WARNING: Contact an IHP dealer to obtain any of these parts. Never use substitute materials not approved by IHP. Use of non-approved parts can result in poor performance and safety hazards.

KEY NO.	CAT. NO.	DESCRIPTION	WRT4536WH (F0627)	WRT4542WH (F0629)	WRT4550WH (F0631)	QTY.
1	F3283	45 series White Herringbone Refractory Set, 36"	•			1
2	---	Refractory, Hearth 36 Std White	•			1
3	---	Refractory, Right 36 Her Whit	•			1
4	---	Refractory, Left 36 Her White	•			1
5	---	Refractory, Rear 36 Her White	•			1
6	J4466	Retainer Assy., Ref. Corner	•			2
1	F3282	45 series White Herringbone Refractory Set, 42"		•		1
2	---	Refractory, Hearth 42 Stk White		•		1
3	---	Refractory, Rt 42 Her White		•		1
4	---	Refractory, Lt 42" Her White		•		1
5	---	Refractory, Rear 42 Her White		•		1
6	J4466	Retainer Assy., Ref. Corner		•		2
1	F3281	45 series White Herringbone Refractory Set, 50"			•	1
2	---	Refractory, Hearth 50 Stk White			•	1
3	---	Refractory, Rt 50" Her White			•	1
4	---	Refractory, Lt 50" Her White			•	1
5	---	Refractory, Rear 50 Her White			•	1
6	J4466	Retainer Assy., Ref. Corner			•	2

KEY NO.	CAT. NO.	DESCRIPTION	WRT4536WS (F0626)	WRT4542WS (F0628)	WRT4550WS (F0630)	QTY.
1	F3280	45 series White Stacked Refractory Set, 36"	•			1
2	---	Refractory, Hearth 36 Std White	•			1
3	---	Refractory, Right 36" Stk Whit	•			1
4	---	Refractory, Left 36 Stk White	•			1
5	---	Refractory, Rear 36" Stk White	•			1
6	J4466	Retainer Assy., Ref. Corner	•			2
1	F3279	45 series White Stacked Refractory Set, 42"		•		1
2	---	Refractory, Hearth 42 Stk White		•		1
3	---	Refractory, Rt 42" Stk White		•		1
4	---	Refractory, Lt 42" Stk White		•		1
5	---	Refractory, Rear 42" Stk White		•		1
6	J4466	Retainer Assy., Ref. Corner		•		2
1	F3278	45 series White Stacked Refractory Set, 50"			•	1
2	---	Refractory, Hearth 50 Stk White			•	1
3	---	Refractory, Rt 50" Stk White			•	1
4	---	Refractory, Lt 50" Stk White			•	1
5	---	Refractory Rear 50" Stk White			•	1
6	J4466	Retainer Assy., Ref. Corner			•	2

ACCESSORIES

CAT NO.	MODEL	DESCRIPTION	
BI-FOLD GLASS DOORS			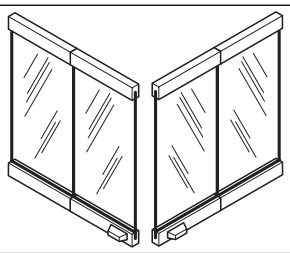
F1002	BDG36	GLASS DOOR, 36" BLACK	
F1005	BDG42	GLASS DOOR, 42" BLACK	
F1008	BD50	GLASS DOOR, 50" BLACK	
DOUBLE WALL PIPE			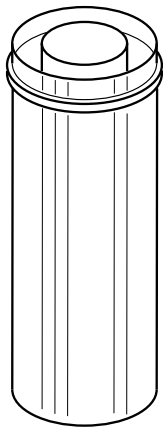
F0932	12-12DM	12" Section Double Wall Pipe Snap Lock	
F0933	18-12DM	18" Section Double Wall Pipe Snap Lock	
F0934	24-12DM	24" Section Double Wall Pipe Snap Lock	
F0935	36-12DM	36" Section Double Wall Pipe Snap Lock	
F0936	48-12DM	48" Section Double Wall Pipe Snap Lock	
F0953	12-12HT	12" Section Hi-Temp Double Wall Pipe Snap Lock	
F0954	18-12HT	18" Section Hi-Temp Double Wall Pipe Snap Lock	
F0955	24-12HT	24" Section Hi-Temp Double Wall Pipe Snap Lock	
F0956	36-12HT	36" Section Hi-Temp Double Wall Pipe Snap Lock	
F0957	48-12HT	48" Section Hi-Temp Double Wall Pipe Snap Lock	
30° OFFSET & RETURN + ADAPTOR			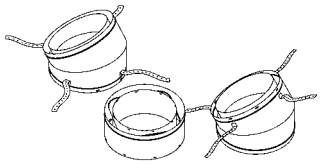
F5169	30E-12DM-B	30 Degree 12DM Offset & Return + Adaptor	
F5170	30E-12HT-B	30 Degree 12HT Offset & Return + Adaptor	
OPTIONAL OUTSIDE AIR KIT FOR FLOOR INSTALLATION			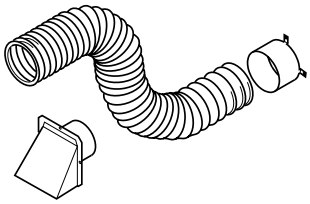
F1091	AK4	Complete Outside Air Kit w/Collars Hood & 3' Flex	
OPTIONAL OUTSIDE AIR KIT FOR SIDEWALL INSTALLATION			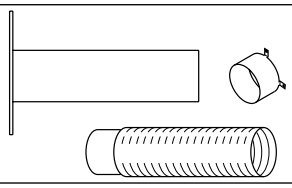
F1093	AK4F	Outside Air Kit Collar, Hood & 3' Flex for Floor Venting	
STORM COLLAR			
F0946	SC2-1	Storm Collar	
CHIMNEY SUPPORT			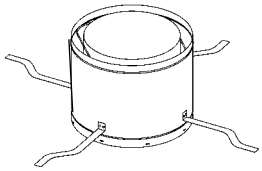
F0938	12S-12DM	CHIMNEY SUPPORT 12DM	
FO959	12S-12HT	CHIMNEY SUPPORT 12HT	
EMBER PROTECTOR			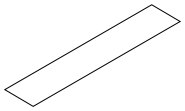
J6906		Ember Protector	

FIRESTOP SPACER			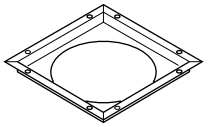
F0940	FS-10	2" Clearance Firestop Spacer	
ROOF FLASHING			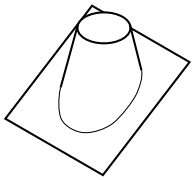
F0942	V6F-10DM	Roof Flashing 0 to 6/12 Pitch	
F0943	V12F-10DM	Roof Flashing 6/12 to 12/12 Pitch	
SQUARE CHASE-TOP TERMINATION			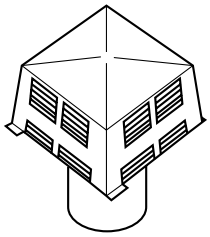
F0948	STL-12D	Square Top Termination with Slip Section	
F0949	STL-12DMP	Square Top Termination with Slip Section (Pre-Painted Black)	
ROUND TOP TERMINATIONS			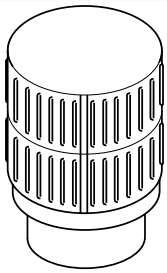
F0947	RLT-12D	Round Top Termination with Louvered Screen	
F0960	RLT-12HT	Hi-Temp Round Top Termination with Louvered Screen	
THIMBLE			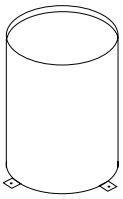
F0944	FST10	Thimble	
LABEL-UL127-50PK			
F2659	LABEL-UL127-50PK	UL127 Venting Label - 50 PK	
REFRACTORY STAIN KITS Use the refractory stain kits to give white refractory panels a new look. Kit includes foam roller handle, paint tray, and one can of stain. Available stain colors are creamer (ivory), Rust (terra cotta), and Cappuccino (rosy taupe).			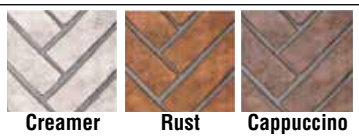
H8176	BSK-CR	Stain Kit (Rfry) 1 Qt. Creamer	
H8177	BSK-RT	Stain Kit (Rfry) 1 Qt. Rust	
H8178	BSK-CP	Stain Kit (Rfry) 1 Qt. Cappuccino	

IMPORTANT NOTICES - CANADA

NOTICE: The firebox canopy (hood) must not be modified or replaced with a canopy that may be provided with the unvented decorative room heater.

CAUTION: THE STRUCTURAL INTEGRITY OF THE MANUFACTURED HOME FLOOR, WALL, AND CEILING/ROOF MUST BE MAINTAINED.

⚠ WARNING: DO NOT INSTALL IN SLEEPING ROOM OF MOBILE HOMES.

Canadian code CAN/ULC-S610-M87 and other pertinent codes require stainless steel chimney for the installation of this fireplace. A Cold Air Climate Kit is also required in Canada and is recommended for cooler regions in the United States. Below, find a list of approved stainless steel parts.

Chimney Parts List for Canada

Catalog No.	Model No.	12" Hi-Temp Wood-burning Chimney
F0953	12-12HT	12" Section Double Wall Pipe
F0954	18-12HT	18" Section Double Wall Pipe
F0955	24-12HT	24" Section Double Wall Pipe
F0956	36-12HT	36" Section Double Wall Pipe
F0957	48-12HT*	48" Section Double Wall Pipe
F5170	30E-12HT-B	30 Degree 12HT Offset & Return + Adaptor
F0959	12S-12HT	Chimney Support
F0960	RLT-12HT*	Round Top w/ Louvers
F0961	AP-12HT	Anchor Plate/Collar Assembly (Masonry Fireplaces)
F0951	CAK-12	Cold Air Collar Kit

*When ordered alone, this part cannot ship via parcel delivery services.

TECHNICAL SERVICE

You may have further questions about installation, operation, or troubleshooting. Please contact your IHP dealer for any questions or concerns a. When contacting your dealer please have your model and serial numbers of your fireplace ready. You can also visit our web site at SuperiorFireplaces.us.com.

REPLACEMENT PARTS

See Pages 19 to 22 for a complete replacement parts list. Use only parts supplied from the manufacturer.

Normally, all parts should be ordered through your IHP distributor or dealer. Parts will be shipped at prevailing prices at time of order.

When ordering repair parts, always give the following information:

(Model and Serial Number information will be found on the fireplace's rating plate located just inside the fireplace opening on the upper right hand side beneath a cover plate. Remove both the cover plate and wing nut to access the rating plate)

1. The model number of the fireplace.
2. The serial number of the fireplace.
3. The part number.
4. The description of the part.
5. The quantity required.
6. The installation date of the fireplace.

If you encounter any problems or have any questions concerning the installation or application of this fireplace, please contact your dealer.

IHP
1769 East Lawrence Street
Russellville, AL 35654
Visit us at SuperiorFireplaces.us.com

Draft Requirements

Your wood-burning appliance is dependent upon a properly functioning chimney for optimum performance. It is important to match the wood-burning appliance to the chimney. The chimney has two functions:

1. It draws combustion air into the appliance (without air, no fuel will burn) and
2. It exhausts combustion by-products. Your new appliance is what is known as a "natural draft" appliance.

The appliance depends solely on the natural draft of the chimney system to draw combustion air into the unit. Draft is the force that moves air from the appliance up into the chimney. The amount of draft in your chimney depends on the length of the chimney, local geography, nearby obstructions and other factors. Too much draft may cause excessive temperatures in the appliance (overfiring). Slow or inadequate draft equals poor combustion and possible smoking problems. The following are some conditions that may contribute to poor chimney draft:

1. A chimney too large for your appliance.
2. A chimney with not enough height to produce adequate draft.
3. A chimney with excessive height (this may allow exhaust to cool too much before exiting, which will stall the rate the exhaust exits).
4. Offsets in the venting system are too restrictive *(see Chimney Guidelines*).

Inadequate draft will cause the appliance to leak smoke into the room through the wood-burning appliance and the chimney connector joints. Excessive draft may cause an uncontrollable burn or a glowing red appliance or chimney part.

Overfiring Damage - If the appliance or chimney connector glows, you are overfiring. Other symptoms may include: Cracking, warping or burning out of components, plated accessories may turn color, appliance glass may develop a haze, which will not come off with cleaning.

Overfiring of a appliance is a condition where excessive temperatures are reached, beyond the design capabilities of the appliance. The damage that occurs from overfiring is not covered under the manufacturer's limited warranty.

Also see Troubleshooting on Page 27.

⚠ WARNING

Neither the manufacturer nor the seller warrants "smoke free" operation nor are we responsible for inadequate system draft caused by mechanical systems, general construction conditions, inadequate chimney heights, adverse wind conditions and/or unusual environmental factors or conditions beyond our control.

Selecting the Proper Venting System

The appliance is merely one component of a larger system. The other equally important component is the venting system. This is necessary for achieving the required flow of combustion air to the fire chamber and for safely removing unwanted combustion by products from the appliance.

If the venting system's design does not promote these ends, the system may not function properly. Poorly functioning venting systems may create performance problems as well as be a safety hazard. **A draft test should read greater than .04' W.C. (inches water column) and less than .08" W.C.** As per NFPA-211 standard, the installer must take into account all variables within the installation and install the appliance in such a manner that satisfies the draft requirements of the appliance. See Chimney Guidelines to assist you in selecting the proper venting system for your installation.

American National Standards Institute ANSI/NFPA 211, Standard for Chimneys, Fireplaces, Vents, and Solid Fuel-Burning Appliances - See Draft Section: A chimney or vent shall be so designed and constructed to develop a flow sufficient to completely remove all flue and vent gases to the outside atmosphere. The venting system shall satisfy the draft requirements of the connected appliance in accordance with the manufacturer's instructions.

Chimney Guidelines:

- In well insulated and weather tight homes, it may be difficult to establish a good draft up your chimney. The poor draft is caused by a shortage of air in the house. In this situation an Outside Air Kit may need to be installed (See Negative Pressure Warning below and Outside Combustion Air in the Installation and Operation manual).

Negative Pressure Warning

These appliances are not designed to be operated in a negative pressure. In very airtight homes with large kitchen exhaust fans, furnace cold air returns, fresh air exchange systems and any other air system in close proximity to the heating appliance may create a negative pressure in the same room as the heating appliance. This can create dangerous back drafting of the appliance and chimney joints, drawing combustion by-products into the home. Be sure your home has adequate makeup air to eliminate negative pressures caused by the above-mentioned sources. Outside air connected to the appliance probably will not resolve such a problem as the appliance is not the source of negative pressure. IHP accepts no liability for damages resulting from negative pressures described here.

Ventilation Requirements - Provide adequate air for combustion. The fresh air requirements of this appliance must be met within the space where it will be installed. Ventilation is essential when using a solid-fuel-burning appliance. In well insulated and weather tight homes, it may be difficult to establish a good draft up the chimney (caused by a shortage of air in the home). The lack of air is caused by many common household appliances which exhaust air from the home (such as a furnace, heat pump, air conditioner, clothes dryer, exhaust fans, fireplaces, and other fuel burning appliances). Also, the combustion process of this appliance uses oxygen from inside the dwelling. If the available fresh air delivery in the dwelling is insufficient to support the demands of these appliances, problems can result (i.e. excessive negative pressure can develop in the dwelling which will affect the rate at which this appliance can draft thus resulting in performance problems or smoking. To correct this problem it may help to open a window (preferably on the windward side of the house) or install an outside air kit.

Smoking – Causes And Troubleshooting

To reduce the likelihood of smoking when opening the door, open the combustion air control or damper before opening the door. Your appliance has been designed and tested to provide smoke free operation. Occasionally, there may be a small amount of smoking upon lighting the fire, until the chimney heats up but this should not continue. If the appliance continues to smoke it is probably for one of the following reasons:

A. Negative pressure in the house -
As the fire burns, air goes up the chimney. This air must be replaced through leakage into the house or through the outside air duct. When operating the appliance, open a nearby window temporarily to check if there is adequate replacement air supply.

B. Blowers operating (e.g.: range hood) - These blowers draw air out of the house and may actually cause a negative pressure in the house. Turn off all blowers and open a nearby window to determine if this is the cause of the problem.

C. Wet wood - Wet or tarred wood will smoulder and smoke instead of burning properly. Your dealer can help you determine if you have properly seasoned wood for burning.

D. Dirty or blocked chimney - Check to make sure the chimney is clear and clean. If dirty call a certified chimney sweep or use a properly sized chimney brush to clean.

E. Chimney not long enough - The minimum chimney height is twelve (12) feet (3.7 m) not including the appliance height. The chimney must extend at least three (3) feet (915 mm) above its point of contact with the roof and at least two (2) feet (610 mm) higher than any roof or wall within ten (10) feet (3 m) of it. When installed with offsets, the minimum chimney height is fifteen (15) feet. Additional height will increase draft and will decrease the tendency to smoke.

F. Poor chimney draft - With no fire, there should be sufficient draft to exhaust cigarette smoke introduced under the baffle or flue baffle. Chimneys installed against an outside wall without protection may generate back draft problems which will cause start-up problems. To prevent this, open a nearby window, roll up a piece of paper and light it. Then, hold it in the upper part of the firebox to warm up the chimney. Wait until the draft is sufficient, then start the fire.

G. Blower for forced air kit operating (some models) - Make sure that the blower is in the "off" position when you open the appliance door for reloading.

Locating The Appliance

The best location to install your appliance is determined by considering the location of windows, doors, and the traffic flow in the room where the appliance is located, allowing space in front of the unit for the hearth extension and the mantel, and taking into consideration the location of the hot air ducts (some models), outside air kit and chimney.
If possible, you should choose a location where the chimney will pass through the house without cutting floor or roof joists.

When selecting the location, the chimney outlet position and the direction of the wind are important factor affecting the chimney performance. To allow a maximum draft and to reduce wind turbulence, the chimney must:

- Penetrate the highest part of the roof.
- Be installed as far as possible of roof offsets, trees or any other obstructions that may cause wind turbulence and back drafts in the chimney.
- The least amount of offsets (elbows) possible. ***NOTE:*** A maximum of 2 offsets is allowed.

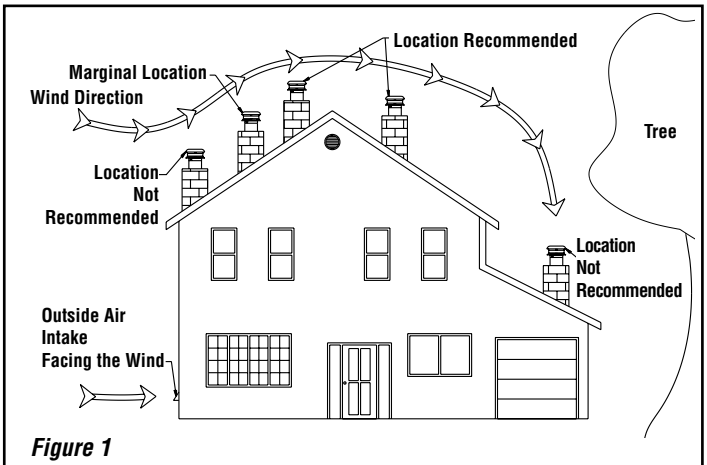

Figure 1

Prohibited Fuels

These appliances are designed to burn natural well-seasoned wood. The wood fuel should be air dried seasoned hardwoods, as compared to softwoods or to green or freshly cut hardwoods. Burning artificial logs, in some model appliances is allowed (see Installation and Operation manual); please read and follow the instructions provided by the manufacturer. DO NOT BURN:

- Garbage;
- Lawn clippings or yard waste;
- Materials containing rubber, including tires;
- Materials containing plastic;
- Waste petroleum products, paints or paint thinners, or asphalt products;
- Materials containing asbestos;
- Construction or demolition debris;
- Railroad ties or pressure-treated wood; woods that have been dipped in tar, pitch, pine tar, creosote, etc.
- Manure or animal remains;
- Salt water driftwood or other previously salt water saturated materials;
- Unseasoned wood;
- Christmas tree branches;
- Paper products, colored paper, cardboard, plywood, or particleboard;
- Gasoline;
- Naphtha;
- Engine Oil;
- Flammable Liquids;
- Solvents;
- Grease; or
- Charcoal or Coal

NOTE: The use of a firewood moisture meter is recommended to ensure the firewood contains less than 20% moisture.

Seasoning Guide

Softwoods - 6 months to 18 months
Hardwoods - 12 months to 24 months

Logs that are 5" diameter across or larger should be split in half, three pieces if over 8 inches, and four pieces when over a foot across. If a tree has been dead for 2 - 4 years it still needs to be cut, split, and seasoned for 6 to 24 months depending on the wood.

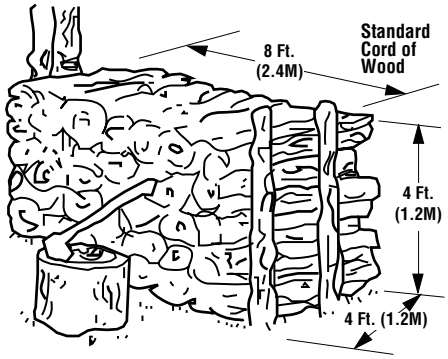

Figure 2

NOTES

Innovative Hearth Products
Superior® Brand Wood-Burning Fireplace
20 Year Limited Warranty

THE WARRANTY

Innovative Hearth Products ("IHP") 20 Year Limited Warranty warrants your Superior® Brand wood burning fireplace ("Product") to be free from defects in materials and workmanship at the time of manufacture. The Product body, firebox and ceramic glass carry the 20 Year Limited Warranty. Ceramic glass carries the 20 Year Limited Warranty against thermal breakage only. After installation, if covered components manufactured by IHP are found to be defective in materials or workmanship during the 20 Year Limited Warranty period and while the Product remains at the site of the original installation, IHP will, at its option, repair or replace the covered components. If repair or replacement is not commercially practical, IHP will, at its option, refund the purchase price or wholesale price of the IHP product, whichever is applicable. IHP will also pay IHP prevailing labor rates, as determined in its sole discretion, incurred in repairing or replacing such components for up to five years. THERE ARE EXCLUSIONS AND LIMITATIONS to this 20 Year Limited Warranty as described herein.

COVERAGE COMMENCEMENT DATE

Warranty coverage begins on the date of purchase. In the case of new home construction, warranty coverage begins on the date of first occupancy of the dwelling or six months after the sale of the Product by an independent IHP dealer/distributor, whichever occurs earlier. The warranty shall commence no later than 24 months following the date of product shipment from IHP, regardless of the installation or occupancy date.

EXCLUSIONS AND LIMITATIONS

This 20 Year Limited Warranty applies only if the Product is installed in the United States or Canada and only if operated and maintained in accordance with the printed instructions accompanying the Product and in compliance with all applicable installation and building codes and good trade practices.

This warranty is non-transferable and extends to the original owner only. The Product must be purchased through a listed supplier of IHP and proof of purchase must be provided. The Product body and firebox carry the 20 Year Limited Warranty from the date of installation. Vent components, trim components, paint and applied stains are excluded from this 20 Year Limited Warranty. The following do not carry a 20 Year Limited Warranty but are warranted as follows:

Air tubes, baffles and brick retainers – Repair or replacement for one year from the date of installation
Cast iron parts – Replacement for one year from date of installation
Catalyst – Carries a separate warranty. Refer to the warranty certificate provided for that part
Electrical components – Repair or replacement for one year from the date of installation
Fireplace screens, refractory and side shields (metal or refractory) – Repair or replacement for two years from date of installation. Excludes hairline cracks.
Fuel grates –These parts are considered consumable accessories and therefore are not warranted, with the exception of defects in material or workmanship which are covered for 90 days from the date of installation
Gaskets – Replacement for one year from date of installation
Gold & nickel plating – Replacement for two years from date of installation. Excludes tarnishing
Optional glass doors – Repair or replacement for 90 days from the date of installation
Refractory & screens – Replacement for two years from date of installation. Excludes hairline cracks
Removable air tubes – Repair or replacement for seven years from date of installation. IHP prevailing labor rates for years one through five.
Labor coverage – Prevailing IHP labor rates apply for the warranty period of the component.

Parts not otherwise listed carry a 90 day warranty from the date of installation.

Whenever practicable, IHP will provide replacement parts, if available, for a period of 10 years from the last date of manufacture of the Product.

IHP will not be responsible for: (a) damages caused by normal wear and tear, accident, riot, fire, flood or acts of God; (b) damages caused by abuse, negligence, misuse, or unauthorized alteration or repair of the Product affecting its stability or performance. (The Product must be subject to normal use with approved fuels listed in the Operation Manual provided with the product. This includes burning such fireplace fuels as wood and natural or propane gas. Fuel products with abnormal burning characteristics, including but not limited to fuel such as driftwood, coal or plywood and wood products using a binder may burn at excessive temperatures and may cause damage to the Product or may cause it to function improperly.); (c) damages caused by failing to provide proper maintenance and service in accordance with the instructions provided with the Product; (d) damages, repairs or inefficiency resulting from faulty installation or application of the Product.

Coverage of this 20 Year Limited Warranty is conditional upon use of an adequate fuel grate on factory-built fireplaces only, when applicable.
IHP is not responsible for inadequate fireplace system draft caused by air conditioning and heating systems, mechanical ventilation systems, or general construction conditions which may generate negative air pressure in the room in which the appliance is installed. Additionally IHP assumes no responsibility for smoking conditions caused by inadequate chimney height, adjoining trees or buildings, adverse wind conditions or unusual environmental factors and conditions. Certain IHP Products are listed for use with Security Chimneys International, Ltd. or IHP chimney systems only. Use of chimney components other than that specified in the Product manual will void the Product warranty.

This 20 Year Limited Warranty covers only parts and labor as provided herein. In no case shall IHP be responsible for materials, components or construction which are not manufactured or supplied by IHP or for the labor necessary to install, repair or remove such materials, components or construction. Additional utility bills incurred due to any malfunction or defect in equipment are not covered by this 20 Year Limited Warranty. All replacement or repair components will be shipped F.O.B. from the nearest stocking IHP factory.

LIMITATION ON LIABILITY

It is expressly agreed and understood that IHP's sole obligation and the purchaser's exclusive remedy under this warranty, under any other warranty, expressed or implied, or in contract, tort or otherwise, shall be limited to replacement, repair, or refund, as specified herein.

In no event shall IHP be liable for any incidental or consequential damages caused by defects in the Product, whether such damage occurs or is discovered before or after replacement or repair, and whether such damage is caused by IHP's negligence. IHP has not made and does not make any representation or warranty of fitness for a particular use or purpose, and there is no implied condition of fitness for a particular use or purpose.

IHP makes no expressed warranties except as stated in this 20 Year Limited Warranty. The duration of any implied warranty is limited to the duration of this expressed warranty.

No one is authorized to change this 20 Year Limited Warranty or to create for IHP any other obligation or liability in connection with the Product. Some states and provinces do not allow the exclusion or limitation of incidental or consequential damages, so the above limitations or exclusions may not apply to you. The provisions of this 20 Year Limited Warranty are in addition to and not a modification of or subtraction from any statutory warranties and other rights and remedies provided by law.

INVESTIGATION OF CLAIMS AGAINST WARRANTY

IHP reserves the right to investigate any and all claims against this 20 Year Limited Warranty and to decide, in its sole discretion, upon the method of settlement.

To receive the benefits and advantages described in this 20 Year Limited Warranty, the appliance must be installed and repaired by a licensed contractor approved by IHP.

Contact IHP at the address provided herein to obtain a listing of approved dealers/distributors. **IHP shall in no event be responsible for any warranty work done by a contractor that is not approved without first obtaining IHP's prior written consent.**

HOW TO REGISTER A CLAIM AGAINST WARRANTY

In order for any claim under this warranty to be valid, you must contact the IHP dealer/distributor from which you purchased the product. If you cannot locate the dealer/distributor, then you must notify IHP in writing. IHP must be notified of the claimed defect in writing within 90 days of the date of failure. Notices should be directed to the IHP Warranty Department at 1769 East Lawrence Street; Russellville, AL 35654 or visit our website at WWW.SUPERIORFIREPLACES.US.COM.

Printed in U.S.A. © 2013 Innovative Hearth Products
P/N 900224-00, Rev. B 02/2018

Innovative Hearth Products
1769 East Lawrence Street • Russellville, AL 35654

SuperiorFireplaces.us.com

Record the following important information about your fireplace:

Fireplace model number	
Fireplace serial number	
Date fireplace was Installed	
Dealer name	

Innovative Hearth Products (IHP) reserves the right to make changes at any time, without notice, in design, materials, specifications, prices and also to discontinue colors, styles and products. Consult your local distributor for fireplace code information.

INNOVATIVE HEARTH PRODUCTS

Printed in U.S.A. © 2014 Innovative Hearth Products

P/N 126601-01 Rev. P 10/2025

1769 East Lawrence Street • Russellville, AL 35654