RH PETERSON CO.

**OWNER'S MANUAL**

realfyre
PREMIUM GAS LOGS

**Standard and Stainless Steel Burner Systems:**
**G10-**(P)(-SS)**
**G10-**-01V(P)(-SS)**
**G10-**-12(M)(P)(-SS)**
**G10-**-15(M)(P)(-SS)**
****Sizes:**
**(16/18, 24/30)**

24" CHAS log set shown

**DESIGN CERTIFIED to standards:**
**Unvented Room Heater CSA/ANSI Z21.11.2**
**and**
**Vented Decorative Appliance ANSI Z21.60**

# G10 VENT FREE GAS LOG SETS

**INSTALLER: Leave this manual with the appliance**
**CONSUMER: Retain this manual for future reference**

**⚠ WARNING: If the information in this manual is not followed exactly, a fire or explosion may result, causing property damage, personal injury, or loss of life.**

**- Do not store or use gasoline or other flammable vapors and liquids in the vicinity of this or any other appliance.**

**- WHAT TO DO IF YOU SMELL GAS:**

- **Do not try to light any appliance.**
- **Do not touch any electrical switch; do not use any phone in your building.**
- **Immediately call your gas supplier from a neighbor's phone. Follow the gas supplier's instructions.**
- **If you cannot reach the gas supplier, call the fire department.**
- **Open a window.**

**- Installation and service must be performed by a qualified installer, service agency, or the gas supplier.**

**It is imperative that you maintain your vent-free gas appliance by having it cleaned and serviced regularly. See pages 23, 29-32 for details.**

**Important**
Read these instructions carefully and completely before starting installation of the burner system.

**This appliance may be installed in an aftermarket, permanently located, manufactured (mobile) home where not prohibited by local codes.**

**This appliance is only for use with the type of gas indicated on the rating plate. This appliance is not convertible for use with other gasses.**

**This is an UNVENTED gas-fired heater. It uses air (oxygen) from the room in which it is installed. Provisions for adequate combustion and ventilation air MUST be provided. See section entitled VENTILATION AND CONFINED SPACE INFORMATION.**

**This appliance is designed as an <u>attended appliance</u>. <u>DO NOT</u> leave this appliance burning when unattended.**

Installation, service, and the provisions for combustion and ventilation air MUST conform with local codes and to the *National Fuel Gas Code*, ANSI Z223.1/NFPA 54, or the *Natural Gas And Propane Installation Code,* CSA B149.1.

NATIONAL FIREPLACE INSTITUTE NFI CERTIFIED www.nficertified.org
We recommend that our gas hearth products be installed and serviced by professionals who are certified in the U.S. by the National Fireplace Institute® (NFI) as NFI Gas Specialists.

PFS® F16-209 US

**ROBERT H. PETERSON CO.** • 14724 East Proctor Avenue • City of Industry, CA 91746

# CONTENTS

## GETTING STARTED


LISTING AND CODE IMPORTANT INFORMATION.3
FIREPLACE IMPORTANT INFORMATION .....4
*FIREPLACE REQUIREMENTS*.....4
*MINIMUM FIREPLACE SIZE REQUIREMENTS*.....4
*GLASS DOOR REQUIREMENTS* .....5
VENTING IMPORTANT INFORMATION.....6
*VENTING REQUIREMENTS* .....6
PRODUCT SPECIFICATIONS .....7
IMPORTANT SAFETY INFORMATION.....8
VENTILATION AND CONFINED SPACE SAFETY INFORMATION.....9
MINIMUM CLEARANCES TO COMBUSTIBLES .. 10
INSTALLATION IMPORTANT INFORMATION..... 12
*PRE-INSTALLATION AND FIREPLACE PREPARATION SAFETY GUIDELINES*..... 12
*INSTALLATION SAFETY GUIDELINES*..... 13


## INSTALLATION


GETTING STARTED..... 14
*BEFORE YOU BEGIN*..... 14
*TOOLS/ITEMS REQUIRED* ..... 14
BURNER INSTALLATION ..... 15
*INSTALL BURNER* ..... 15
*INSTALL/REPLACE BATTERIES (IF APPLICABLE)* ..... 16
*INSTALL REMOTE RECEIVER (if equipped)* ..... 17
DECORATIVE MEDIA PLACEMENT..... 18
*PLACE DECORATIVE WOOD CHIP (if equipped)*..... 18
*LAVA GRANULES (DECORATIVE)*..... 18
*GLOWING EMBERS AND BRYTE COALS PLACEMENT*18
*LOG SET PLACEMENT*..... 19
FIRST TIME LIGHTING AND OPERATION TEST.. 20
CHECK GAS PRESSURE..... 21
COMPLETE THE INSTALLATION ..... 21


## OWNERS MANUAL AND OPERATION


OPERATION SAFETY INFORMATION .....22
*OPERATION SAFETY GUIDELINES* .....22
LIGHTING INSTRUCTIONS - MANUAL SERIES 25
LIGHTING INSTRUCTIONS - 01V SERIES.....26
LIGHTING INSTRUCTIONS - 12 SERIES .....27
LIGHTING INSTRUCTIONS - 15 SERIES .....28
ROUTINE MAINTENANCE & SERVICE.....29
*INSPECT OVERALL INSTALLATION*.....29
*REPLACE THE BATTERIES (if applicable)* .....30
*SYNC THE REMOTE SYSTEM (if applicable)* .....30
*INSPECT BURNER FLAME APPEARANCE* .....30
CLEANING AND SERVICING .....31
*TO CLEAN THE BURNER SYSTEM* .....31
*CLEANING AND SERVICING THE ODS PILOT* .....31
CHECKING THE ODS PILOT FLAME APPEARANCE.....32


## APPENDIX


BURNER REPLACEMENT PARTS LIST - MANUAL SERIES .....33
BURNER REPLACEMENT PARTS LIST - 01V SERIES .....34
BURNER REPLACEMENT PARTS LIST - 12 SERIES .....35
BURNER REPLACEMENT PARTS LIST - 15 SERIES .....36
WIRING DIAGRAMS .....37
NOTES PAGE .....38
TROUBLESHOOTING.....39
WARRANTY .....44

# LISTING AND CODE IMPORTANT INFORMATION

## LISTING

This burner system has been certified to two standards:

UNVENTED ROOM HEATER- CSA/ANSI Z21.11.2

VENTED DECORATIVE APPLIANCE-ANSI Z21.60

It has been certified for use with either natural or propane gas, and is approved for installation in a solid-fuel burning fireplace.

*G10 stainless steel models are also permitted in certified RHP/AFD fireplaces.

**WARNING: This appliance has been designed and certified for installation only in a solid-fuel-burning masonry or UL-127 factory-built fireplace, or in a listed ventless firebox enclosure.**

**Exception:** **DO NOT** install this appliance in a factory built fireplace that includes instructions stating it has not been tested or should not be used with unvented burner systems.

**Note:** Installation in any other fireplace is prohibited and will void any approvals and warranties.

## CODE REQUIREMENTS

**A.** Check local or state codes to determine if vent-free heaters are permitted in your locality before you install this burner system as a vent-free appliance. If not permitted, you may install and operate this burner system as a vented appliance.

**B.** The installation, and the provisions for combustion and ventilation air must conform to the *National Fuel Gas Code, ANSI Z223.1/NFPA 54, or the Natural Gas and Propane Installation Code, CSA B149.1,* and applicable local building codes.

**C.** This burner system shall not be installed in a room or space unless the required volume of indoor combustion air is provided by the method described in the *National Fuel Gas Code, ANSI 2223.1/NFPA 54*, the International Fuel Gas Code, or applicable local codes.

**D.** To comply with certification, listings, and building code acceptances, and for safe operation and proper performance of this gas log set, use ONLY Peterson parts and accessories. Use of other controls, parts, and accessories that are not designed for use with Real Fyre gas log sets are prohibited and will void all warranties, certifications, listings, and building code approvals, and may cause property damage, personal injury, or loss of life.

**E.** This appliance may be installed in an aftermarket, permanently located, manufactured (mobile) home, where not prohibited by local codes. Installation of appliances designed for manufactured home (U.S. only) or mobile home installation must conform with the Standard *Mobile Housing*, *CAN/CSA Z240 MH*, in Canada, or with the *Manufactured Home Construction and Safety Standard, Title 24 CFR, Part 3280,* in the United States, or when such a standard is not applicable, *Manufactured Home Installations Standard ANSI/NCSBCS A225.1/NFPA 501A.*

## COMMONWEALTH OF MASSACHUSETTS REQUIREMENTS (if applicable)

This appliance is approved for installation in the state of Massachusetts subject to the following requirements:

**A.** Install this appliance in accordance with 527 C.M.R. and 248 C.M.R., the Rules and Regulations Governing Plumbers and Gas Fitters.

**B.** The installer or service agent must be a plumber or gas fitter licensed in the Commonwealth of Massachusetts.

**C.** This vent-free gas appliance is designed to be used with an external wall switch or an external remote thermostatic control system.

**D.** Models with the suffix 12(P), 15(P), 01V(P)are designed to be used with an external wall switch or an external remote wall thermostatic control system.

# FIREPLACE IMPORTANT INFORMATION

This burner system is equipped with an Oxygen Depletion Sensor (ODS) safety pilot system. The ODS senses the amount of oxygen available in the room and shuts the burner system off before the oxygen level drops below 18%. The pilot can only be relit when fresh air is available. **This may require opening a window or a door to another room or cracking the damper open slightly.**

## FIREPLACE REQUIREMENTS

**A.** This appliance is to be installed only in a solid-fuel burning fireplace with a working flue and constructed of noncombustible material, or UL-127 factory-built fireplace, or in a listed ventless firebox enclosure. Solid fuels shall not be burned in a fireplace where a decorative appliance is installed.

**B.** **WARNING:** When installing in a solid-fuel-burning fireplace, **the chimney flue, damper, and firebox must be thoroughly CLEANED** of soot, creosote, ashes, and loose paint, and must be inspected by a qualified chimney cleaner. Some older fireplaces may need repair prior to installing this appliance.

**C.** The fireplace floor must be level and smooth.

**D.** **To install the gas appliance in your fireplace, the fireplace MUST meet the minimum size requirements (see below).**

**E.** Minimum fireplace dimensions and centering the appliance in the fireplace will ensure adequate clearance for accessibility for purpose of servicing and proper operation. It may be necessary to disconnect the unit for some types of service.

**F.** **DO NOT install this burner system in a fireplace with an ash lip or recess greater than 3/4" (see below).**

**G.** A fireplace screen must be in place when the appliance is operating. Unless other provisions for combustion air are provided, the screen shall have an opening(s) for introduction of combustion air.

## MINIMUM FIREPLACE SIZE REQUIREMENTS

| Model | Dimensions | | | |
|---|---|---|---|---|
| | Width* | | Depth ‡ (C) | Height (D) |
| | Front (A) | Rear † (B) | | |
| **G10-16/18 (16/18" log set)** | 22" | 20" | 13" | 17" |
| **G10-24/30 (24" log set)** | 28" | 20" | 14" | 17" |
| **G10-24/30 (30" log set)** | 34" | 20" | 14" | 17" |

**Important Information Regarding Dimensions**

* These required widths allow for centering of the unit.
† Rear width is at corresponding depth
‡ If an ash lip exists, the depth requirement begins inside of the lip (see Fig. 4-2 below)

**Table 4-1** Minimum Fireplace Size Requirements

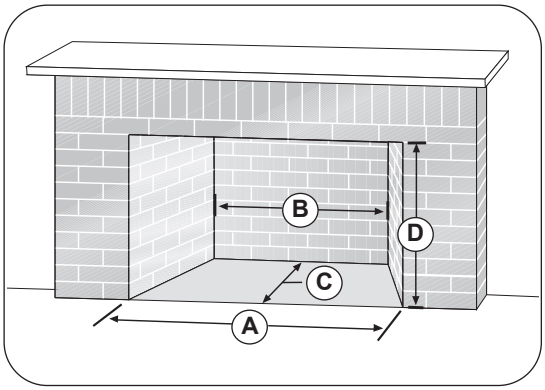


**Fig. 4-1** Fireplace Dimensions Detail

## ASH LIP/RECESS REQUIREMENTS (if applicable)

- DO NOT install this burner system in a fireplace with an ash lip or recess greater than 3/4".
- The depth (as indicated in Table 4-1) begins inside of the lip.

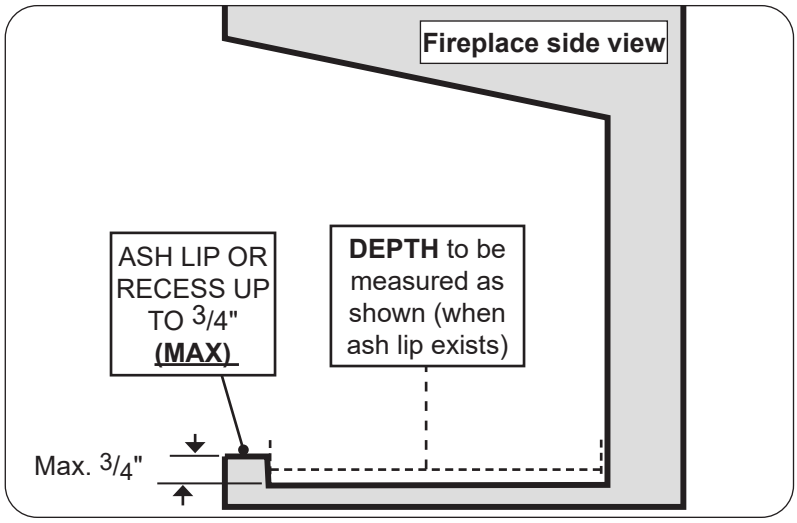


**Fig. 4-2** Ash lip/recess detail

## GLASS DOOR REQUIREMENTS

If this burner system is installed in a fireplace with glass doors, and the door frame bottom is greater than 3/4" in height, the frame MUST have slots (above the fireplace floor) that allow adequate ventilation. This prevents airflow obstruction (to the fireplace floor). See Fig. 5-1.

**Note:** The doors can be installed in front of an ash lip (that meets the requirements on the previous page).

**Important:** The opening (with doors fully open) MUST meet the minimum fireplace size front width and height requirements. See Table 4-1 and Fig. 5-1.

**Important: The glass doors MUST be fully open when the burner is in operation.**

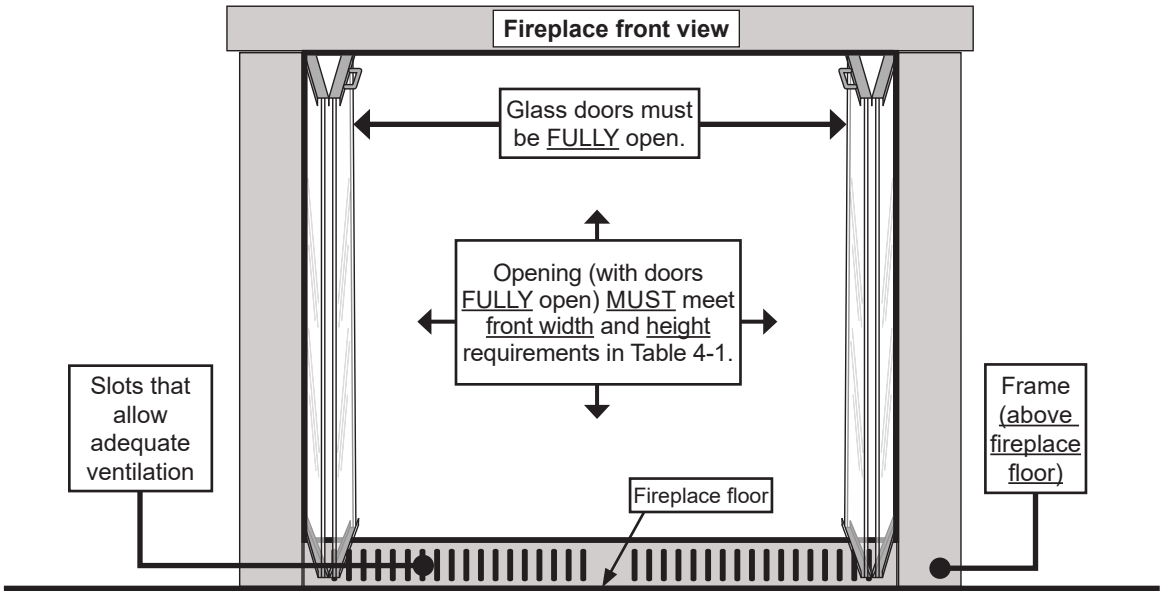


**Fig. 5-1** Correct glass-doors frame setup, ventilation, and use (if applicable)

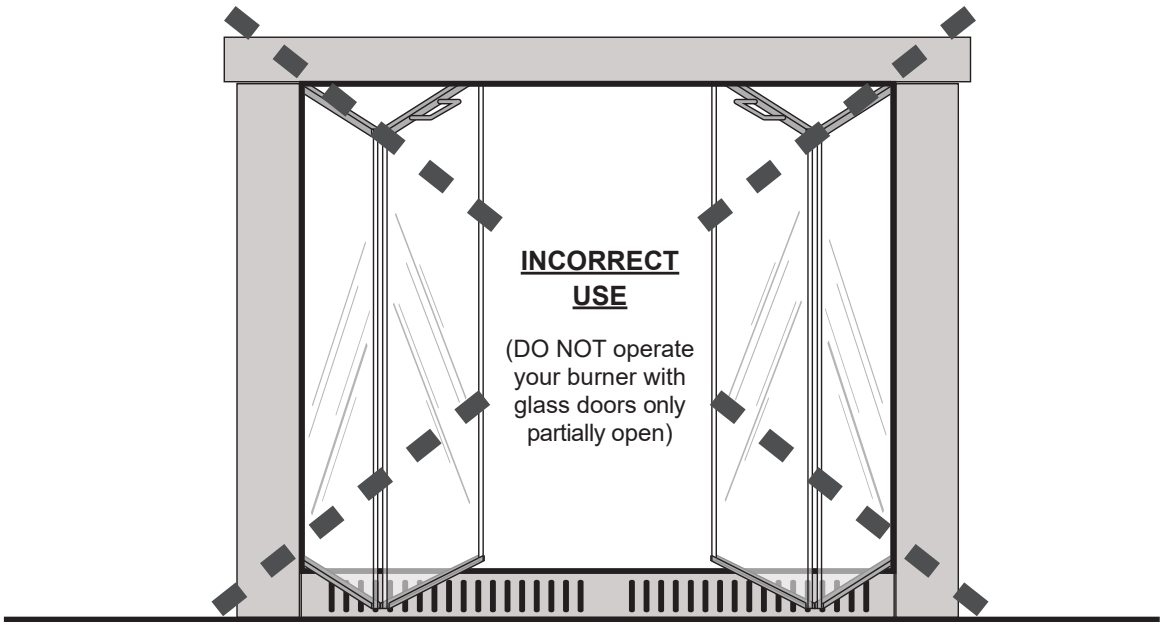


**Fig. 5-2** Incorrect glass-doors frame setup, ventilation, and use (if applicable)

## VENTING REQUIREMENTS

**A.** Do not install this vent-free burner system where the room is considered a confined space (see VENTILATION AND CONFINED SPACE SAFETY INFORMATION section for more details).

**B. It may be necessary to open a window slightly (1"- 2") or otherwise increase ventilation.**

**C.** When used as a vented appliance, a damper clamp, which MUST be permanently installed, is included to maintain the minimum permanent free opening requirement, and to prevent full closure of the chimney damper. See the table below for the free opening requirement specific to your model and setup.

**D. The chimney damper MUST be fully open when burning the unit.** The unit is designed to burn with blue/yellow flames; thus adequate ventilation is absolutely necessary.

**E.** The minimum chimney height from hearth to top of chimney is 15'.

## MINIMUM PERMANENT FREE OPENING IN CHIMNEY (when used as a vented appliance)

| Chimney height | For factory-built fireplaces | |
|---|---|---|
| | 16/18" | 24/30" |
| 15' | 15 sq. in. | 17 sq. in. |
| 20' | 13 sq. in. | 14 sq. in. |
| 25' | 12 sq. in. | 12 sq. in |
| 30' | 11 sq. in. | 11 sq. in. |
| | For masonry-built fireplaces | |
| 15' | 25 sq. in. | 27 sq. in. |
| 20' | 23 sq. in. | 24 sq. in. |
| 25' | 22 sq. in | 22 sq. in. |
| 30' | 21 sq. in. | 21 sq. in. |

**Table 6-1** Minimum permanent free opening

**THESE ARE MINIMUM SPECIFICATIONS FOR THE PERMANENT FREE OPENING REQUIREMENT**

# PRODUCT SPECIFICATIONS

## BTU RATING

| Model | Rating | | | |
|---|---|---|---|---|
| | Nat. Gas | | L.P. Gas | |
| | Low Setting † | High Setting | Low Setting † | High Setting |
| **G10-16/18 (16/18" log set)** | 26k | 35k | 24k | 32k |
| **G10-24/30 (24" log set)** | 19k | 37k | 19k | 37k |
| **G10-24/30 (30" log set)** | 19k | 37k | 19k | 37k |

† Low setting is only available on 01V &15 series

**Table 7-1** BTU Rating

## BATTERY SPECIFICATIONS

| Specification | | Value | Qty. |
|---|---|---|---|
| 12 Series | Remote transmitter battery type | 12V battery | 1 |
| | Remote receiver battery type | AA battery | 4 |
| 15 Series | Remote transmitter battery type | 12V battery | 1 |
| | Remote receiver battery type | AA battery | 4 |
| 01V Series | Remote transmitter battery type | 9V battery | 1 |
| | Remote receiver battery type | AA battery | 4 |

**Table 7-2** Technical Data (if applicable)

**Proceed to the following pages for safety information and installation details.**

# IMPORTANT SAFETY INFORMATION

## VENT-FREE ROOM HEATER GENERAL SAFETY INFORMATION

**A. WARNING: CARBON MONOXIDE POISONING MAY LEAD TO DEATH**.

Early signs of carbon monoxide poisoning are similar to the flu, with headaches, dizziness, and/or nausea. If you have these signs, the gas appliance may not be installed correctly, or may not be working properly. GET FRESH AIR AT ONCE! STOP USING THE APPLIANCE IMMEDIATELY! Some people, including pregnant women; persons with heart or lung disease, asthma, or anemia; those under the influence of alcohol; and persons at high altitudes, are more affected by carbon monoxide than others. (**The appliance must be serviced by a qualified professional service technician before use**).

**B. This appliance is intended for supplemental heating, and is not a primary heating source.** Water vapor produced by vent-free burner systems can create moisture problems in a home when operated for extended periods of time. If condensation begins to occur, open your damper or a window.

**C.** If any soot appears on the appliance or other areas of the fireplace in which this appliance is installed, shut system off and call a qualified professional service technician, **vent-free gas burner system technician,** or your local gas company.

**D.** While required clearances generally prevent heat-related discoloration or warping, each installation is unique and may be affected by variables beyond the manufacturer's control. Therefore, heat warping or discoloration may still occur regardless of the fuel used, including wood.

**E.** Make sure there is adequate combustion and ventilation air when this gas appliance is operating. You may need to crack the damper or open a window slightly.

**F.** Eliminate drafts **before** using the gas appliance by closing heating and air conditioning vents, returns, and outside air vents. Avoid any drafts that alter burner flame patterns when this appliance is operating. Do not allow fans to blow directly into the fireplace.

**G. WARNING:** This appliance has been designed and certified for installation only in a solid-fuel-burning masonry or UL 127 factory-built fireplace or in a listed ventless firebox enclosure. Stainless steel models are also permitted in certified RHP/AFD fireplaces.

Exception: DO NOT install this appliance in a factory-built fireplace that includes instructions stating it has not been tested or should not be used with unvented gas burner systems.

**H. WARNING: DO NOT MODIFY THIS VENT-FREE BURNER SYSTEM OR ITS CONTROLS. Any change may be dangerous.** Improper installation or use of your vent-free gas appliance can cause serious injury or death from fire, burns, explosions, or carbon monoxide poisoning.

**I.** State and local codes may only allow operation of this appliance in a vented configuration. Check your state or local codes. See LISTING AND CODE IMPORTANT INFORMATION section.

**J.** WHEN INSTALLING AS A DECORATIVE VENTED APPLIANCE, THE UNIT MUST CONFORM TO ALL LOCAL CODES AND TO THE LATEST EDITION OF THE NATIONAL FUEL GAS CODE ANSI Z223.1/ NFPA54.

**K.** PETERSON (REAL FYRE) DECORATIVE MEDIA ARE THE ONLY MEDIA CERTIFIED TO BE USED IN THIS BURNER. DO NOT USE ANY OTHER MEDIA.

**⚠ WARNING: FIRE, EXPLOSION, AND ASPHYXIATION HAZARD**

**Improper adjustment, alteration, service, maintenance, or installation of this burner system or its controls can cause death or serious injury. Read and follow instructions and precautions in this manual.**

**Important:** For safe operation and proper performance of this product and to comply with certification, listings, and building code acceptances, use ONLY Peterson Real Fyre controls, parts, and accessories that have been specifically listed or certified for use with this burner system. Use of other controls, parts, or accessories is prohibited and will void all warranties, certifications, listings, and building code approvals, and may cause property damage, personal injury, and loss of life.

# VENTILATION AND CONFINED SPACE SAFETY INFORMATION

**This burner system shall not be installed in a room or space unless the required volume of indoor combustion air is provided by the method described in the National Fuel Gas Code, ANSI 2223.1/NFPA 54, the International Fuel Gas Code, or applicable local codes.**

- The National Fuel Gas Code, ANSI Z223.1/NFPA 54 defines a confined space as a space whose volume is less than 50 cu. ft. per 1,000 BTU per hour (4.8 meters $^3$ per kw) of the aggregate input rating of all appliances installed in that space.
- An unconfined space is a space where volume is at least 50 cu. ft. per 1,000 BTU per hour (4.8 meters $^3$ per kw) of the aggregate input rating of all appliances installed in that space.
- Rooms communicating directly with the space in which the appliances are installed, through openings not furnished with doors, are considered a part of the unconfined space.

**WARNING:** Do not install the vent-free burner system where the room is considered a confined space (see Fig. 9-1).

## Determine the BTUs allowed for your space:

To determine if the area where this burner system is to be installed fits the definition of an unconfined space, multiply the length of the room by the width of the room by the height of the room, then multiply by 20. The result is the maximum BTU allowed.

(**L**ength x **W**idth x **H**eight x **20** = Maximum BTUs allowed)

*Example:* To install a vent-free gas burner system with 36,000 BTU, maximum, in a space with no other gas-burning appliances, the space **MUST** be 1,800 cu. ft. or larger.

Assuming an 8' ceiling, floor dimensions must be a minimum of 225 sq. ft.,
i.e.; 18'x12.5'=225 sq ft (see Fig. 9-1).

**Fig. 9-1**

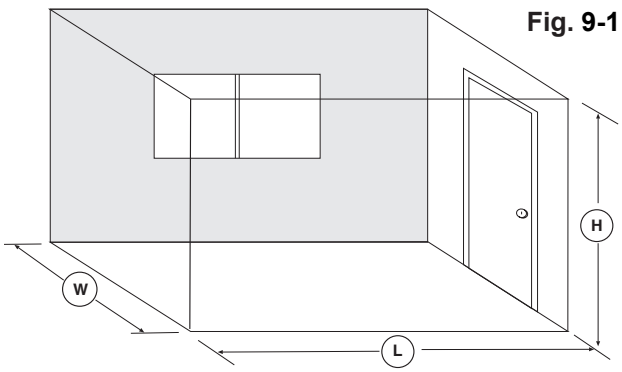


**L x W x H x 20 = Maximum BTU allowed**

**WARNING**

**If the area in which the heater may be operated is smaller than that defined as an unconfined space or if the building is of unusually tight construction, provide adequate combustion and ventilation air by one of the methods described in the National Fuel Gas Code, ANSI Z223.1/NFPA 54, Air for Combustion and Ventilation, or applicable local codes.**

**REMEMBER**

**L x W x H x 20 = MAXIMUM BTUs ALLOWED**

**If the space is smaller than the above formula allows, and/or smaller than the examples and diagrams on this page specify, DO NOT install the vent-free burner system unless provisions for additional combustion and ventilation air are made.**

**IT MAY BE NECESSARY TO OPEN A WINDOW SLIGHTLY (1"- 2") OR OTHERWISE INCREASE VENTILATION. CONDITIONS REQUIRING THIS INCLUDE, BUT ARE NOT LIMITED TO:**

1. **Installation in a CONFINED SPACE.**
2. **Installation in a HOME OF UNUSUALLY TIGHT CONSTRUCTION**.**
3. **Installation at HIGH ALTITUDES.**
4. **Certain MEDICAL OR PHYSICAL CONDITIONS OF THE HOMEOWNER that may be adversely impacted by combustion products created by burning natural or propane gas.**

**Installation in a tightly constructed home and/ or installation at high altitudes** may cause your vent-free burner system to produce excessive heat or excessive moisture. The oxygen depletion sensor may shut down the burner system. These conditions may be corrected by opening a window or otherwise increasing the number of air changes in the home.

**Unusually tight construction is defined as construction where:

a. Walls and ceilings exposed to the outside atmosphere have a continuous water vapor retarder with a rating of 1 perm ($6x10^{-11}$ kg per pa-sec-m$^2$), or less with openings gasketed or sealed;

b. Weather stripping has been added on openable windows and doors, and

c. Caulking or sealants are applied to areas such as joints around window and door frames, between sole plates and floors, between wall-ceiling joints, between wall panels, at penetrations for plumbing, electrical, and gas lines, and at other openings.

This vent-free burner system has been certified to function safely and reliably with emission by-products well within accepted safety and health standards. **Your specific medical or physical condition** may render you more sensitive to products created by burning natural or propane gas. If this is the case, you should open a window or otherwise increase ventilation.

# MINIMUM CLEARANCES TO COMBUSTIBLES

**If the vent-free burner system is installed in a factory built fireplace, follow the manufacturer's guidelines for minimum clearances to combustibles.**

In the absence of such guidelines, follow the instructions below:

**Clearances to Combustible Construction:**

Sidewalls: 6" from side of fireplace opening (Fig. 10-1).
Ceiling: 42" from top of fireplace opening (Fig. 10-1).
Flooring: See IN FRONT OF FIREPLACE section below.
Mantel: See ABOVE THE FIREPLACE section below & Fig. 10-1. Also see Fig. 11-1, & 11-2 on following page).

**Note:** Clearances to combustible construction are those distances required to ensure that fireplace mantels, facings, walls, ceilings, and floorings will not catch fire.

While required clearances generally prevent heat-related discoloration or warping, each installation is unique and may be affected by variables beyond the manufacturer's control. Therefore, heat warping or discoloration may still occur regardless of the fuel used, including wood.

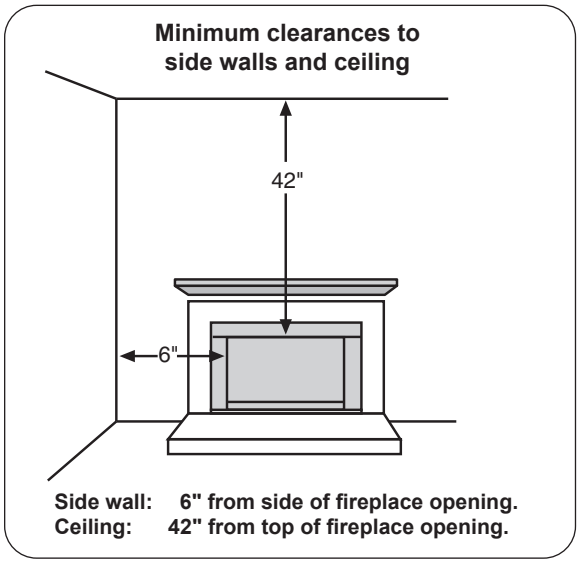


**Fig. 10-1** Minimum Clearances

The dimensions in Fig. 10-1 are **MINIMUM CLEARANCES** to maintain when you install this burner system. **BOTH SIDES** of the fireplace opening **MUST BE AT LEAST 6**" from any combustible sidewalls. The ceiling **MUST BE** at least **42**" from the top of the fireplace opening.

**IN FRONT OF THE FIREPLACE:**

Be certain that combustible flooring material (i.e.: carpet, tile, etc.) is not too close to the vent-free unit. If the vent-free burner system is at floor level or less than 6" above the floor, there **MUST** be at least 12" (1 foot) of noncombustible material between the front of the fireplace and any combustible flooring.

**ABOVE THE FIREPLACE:**

To install the vent-free burner system, there must ALWAYS be noncombustible or heat resistant material immediately above the fireplace opening. Heat resistant materials (i.e., marble or slate) must be at least $^5/_8$" thick. Sheet metal should not be installed onto combustible materials.

If you DO NOT install a fireplace hood, there MUST be at least 12" of noncombustible or heat resistant material immediately above the fireplace opening (**see A** in Fig. 11-1 on the following page). If you DO install a fireplace hood, there MUST be at least 10" of noncombustible or heat resistant material immediately above the fireplace opening (**see B** in Fig. 11-2 on the following page). If there is a wooden mantel, shelf, or other combustible projection above the fireplace, follow the information in the figures on the next page.

**EXAMPLE:** If the fireplace has a combustible projection (mantel or shelf) 20" above the top of the firebox, the maximum horizontal projection out from the face of the fireplace will be:

1. If a fireplace hood is not installed - **2.5"** (see Fig. 11-1 on the following page).
2. If a fireplace hood is installed ------ **10"** (see Fig. 11-2 on the following page).

A fireplace hood deflects heat away from the fireplace face and mantel, reducing the potential for heat related warping or discoloration. The use of a fireplace hood is highly recommended.

DO NOT place any combustible decorations/items on the mantel or above the fireplace.

**IF YOU CANNOT MEET THESE MINIMUM CLEARANCES, YOU MUST OPERATE THE VENT-FREE BURNER SYSTEM WITH THE CHIMNEY FLUE DAMPER OPEN.**

Proceed to the following page for MANTEL CLEARANCE

# MINIMUM CLEARANCES TO COMBUSTIBLES (Cont.)

**IF YOU CANNOT MEET THESE MINIMUM CLEARANCES, YOU MUST OPERATE THE VENT-FREE GAS BURNER SYSTEM WITH THE CHIMNEY FLUE DAMPER OPEN.**

## MANTEL CLEARANCE

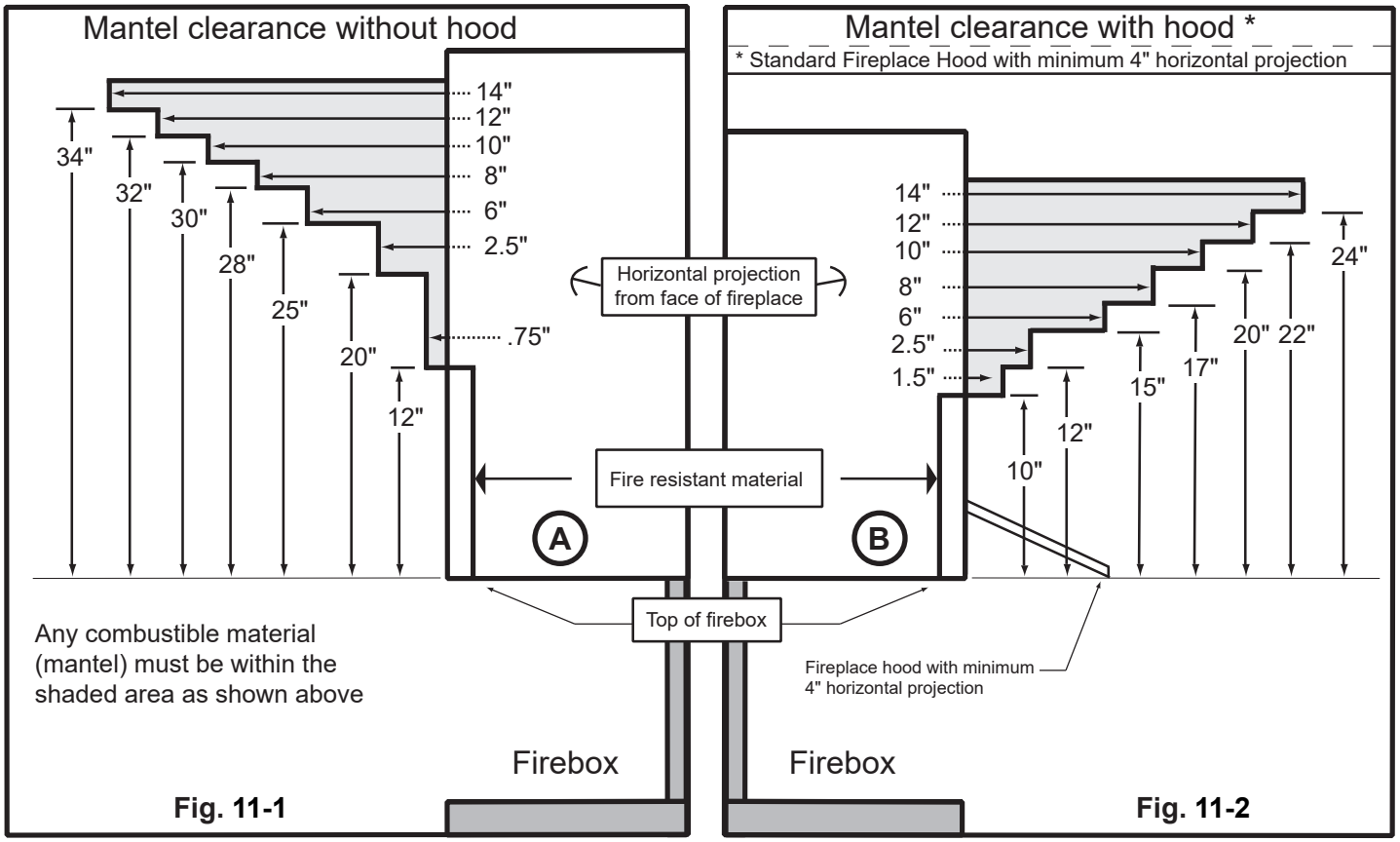

# INSTALLATION IMPORTANT INFORMATION

**CAUTION: Installation and repair must be done by an NFI Certified or other qualified professional installer.**

**Installer:** Carefully read these instructions before installing this gas burner system. Be sure you understand all safety precautions and warnings contained in this manual.

## PRE-INSTALLATION AND FIREPLACE PREPARATION SAFETY GUIDELINES

**A. CAUTION: If not installed, serviced, and used correctly per these instructions, this product can cause serious personal injury, property damage, or loss of life.**

**B. A shut-off valve (not included) in the gas supply line is required.** It must be installed upstream of the unit and must be easily accessible. The shut-off valve cannot be located in the fireplace firebox. Refer to the NFPA 54 guidelines for further details.

**C.** A sediment trap in the gas supply line is recommended where applicable. It should be installed downstream of the shut-off valve as close to the unit as possible. Refer to the NFPA 54 guidelines for further details.

**D. WARNING:** Before installing in a solid-fuel-burning fireplace, **the chimney flue, damper, and firebox must be thoroughly CLEANED** of soot, creosote, ashes, and loose paint by a qualified chimney cleaner. Some fireplaces (especially older ones) may need repair prior to installing this appliance.

**E.** This appliance is only for use with the type of gas indicated on the rating plate. This appliance is **NOT CONVERTIBLE** for use with other gases.
CHECK GAS TYPE (natural or L.P): The gas supply must be the same as stated on your burner system rating plate. If gas supply is different, **DO NOT INSTALL**. Contact your dealer for immediate assistance.

**F.** Any outside air ducts and/or ash dumps located on the floor or walls of the fireplace must be permanently sealed shut before the installation. Use a heat-resistant sealant. Do not seal the chimney flue damper.

**G.** INSUFFICIENT GAS PRESSURE WILL KEEP THE ODS (OXYGEN DEPLETION SENSOR) PILOT FROM OPERATING PROPERLY. DO NOT USE IF GAS PRESSURE IS LOWER THAN THE MINIMUM REQUIREMENT.

**H.** The *minimum* inlet gas-supply pressure for purposes of input adjustment is **5"** water column (w.c.) on **natural gas** and **11"** w.c. on **L.P. gas**. Insufficient gas pressure will affect proper operation of the ODS pilot. Do not install this gas appliance if minimum pressure is not available. The *maximum* inlet gas-supply pressure is **10.5"** w.c. on natural gas and **13"** w.c. on L.P. gas. **The L.P. source must be regulated, located outside, and hard-lined in (rigid pipe must come into the fireplace). DO NOT connect this appliance to an unregulated L.P. gas tank/cylinder. DO NOT locate the tank/cylinder inside of the home. DO NOT run a rubber hose or flex connector into the fireplace. Failure to follow these requirements can cause an explosion, property damage, personal injury, or loss of life.**

**I. The gas piping system must be sized to provide minimum inlet pressure at the maximum flow rate (BTU/hr)**. Undue pressure loss will occur if the pipe is too small, or the run is too long. Gas supply pipe must be $^1/_2$" minimum interior diameter. If the gas line is longer than 20', a larger diameter line may be necessary. Refer to the NFPA 54 guidelines for further details.

**J.** The minimum clearance from the fireplace opening to combustible materials on side walls and ceiling must be maintained as outlined in MINIMUM CLEARANCE TO COMBUSTIBLES.

**K.** At least 10"-12" of noncombustible or heat-resistant material is required above the fireplace. A fireplace hood will be required to act as a heat deflector in protecting combustible fireplace surrounds (facing and/or mantel) if certain minimum clearances cannot be met.

**L.** Be certain that combustible flooring material (i.e., carpet, tile, etc.) is not too close to this gas appliance. If this appliance is at floor level or less than 6" above the floor, there must be at least 12" of noncombustible material between the base of the fireplace and any combustible flooring.

**M.** Input ratings shown in BTU per hour are for elevations up to 2,000 ft. For elevations above 2,000 ft., refer to the National Fuel Gas Code or contact the Robert H. Peterson Company before installing this product.

**N.** This gas appliance and its appliance main gas valve must be disconnected from the gas-supply piping system during any pressure testing of that system at test pressures in excess of $^1/_2$ psi (3.5 kPa).

**O.** This gas appliance must be isolated from the gas supply piping system by closing its equipment shutoff valve during any pressure testing of the gas supply piping system at test pressures equal to or less than $^1/_2$ psi (3.5 kPa).

**WARNING**
THIS APPLIANCE IS EQUIPPED FOR EITHER NATURAL OR PROPANE GAS.
FIELD CONVERSION IS NOT PERMITTED.

## INSTALLATION SAFETY GUIDELINES

**A.** Carefully inspect the burner and media cartons for shipping damage. If any parts are missing/damaged, call your dealer. **Do not attempt** to install the appliance unless all parts are in good condition.

**B.** Do not use this appliance if any part has been under water. Immediately call a qualified professional service technician to inspect the appliance and to replace any part of the control system and any gas control which has been under water.

**C.** Correct placement and installation of the burner assembly, log set and all decorative media are imperative to safe operation of your appliance. Problems **WILL** occur if not all items are properly installed. Reference the BURNER INSTALLATION, LOG SET PLACEMENT and DECORATIVE MEDIA PLACEMENT sections for details.

**D.** When installing in a wood-burning fireplace, **center the appliance in the fireplace** while making certain that no part of the assembly protrudes (forward) beyond the face of the fireplace.
**DO NOT PUSH THE UNIT ALL THE WAY TO THE BACK.**

**E.** If you use lava granules, or glass or gems, for decorative use, do not allow these accessories into or onto any part of the burner or on the logs. Lava granules, or glass or gems used to accessorize the vent-free burner, should only be placed on the floor of the fireplace, in front of and to the sides of the burner, but away from the controls.

**F.** DO NOT PLACE additional logs or other accessories, such as wood chips, pine cones, or vermiculite, on this appliance. These items will cause improper burning, sooting, and/or high levels of carbon monoxide. Additional logs and/or accessories may be placed around the burner system, as long as they do not interfere with the burning of your gas appliance.

**G. Due to high temperatures, this appliance should be located out of traffic and away from furniture and draperies.**

**H.** A fireplace screen must be in place when the appliance is operating. Unless other provisions for combustion air are provided, the screen shall have an opening(s) for introduction of combustion air.

**I.** Connecting directly to an unregulated L.P. tank can cause an explosion.

**J.** Special care is required if you are installing the unit into a **SUNKEN FIREPLACE**. You must raise the fireplace floor to allow access to gas controls. This will ensure adequate airflow and guard against sooting. Raise the fireplace floor using noncombustible materials.

**K.** An unvented room heater having an input rating of more than 10,000 Btu/hr (2931W) shall not be installed in a bedroom or bathroom (CSA/ANSI Z21.11.2).

**L.** An unvented room heater having an input rating of more than 6,000 Btu/hr (1758W) per hour shall not be installed in a bathroom (CSA/ANSI Z21.11.2).

# GETTING STARTED

## BEFORE YOU BEGIN

**Important:** **Prior to installation ensure that all specifications and requirements in this manual are observed. You must read all warnings and important information, and understand all of the information in this manual. All requirements must be observed and met.**

**WARNING:** Failure to position the parts in accordance with these diagrams or failure to use only parts specifically approved with this appliance may result in property damage or personal injury.

- The burner system must be installed by a qualified professional service technician.
- Instructions must be followed carefully to ensure proper performance and full benefit from the burner system.
- Be sure the gas supply is turned off at its source.
- Confirm the installation site accommodates the unit per the requirements in this manual. Ensure the fireplace floor is level, clean, and smooth.

**Important:** **When a stainless steel burner system is installed outdoors, ensure it is not directly exposed to the elements (precipitation, rain, wind, etc.).**

- Remove all packing material (including any protective coatings) and discard prior to installation.

CHECK GAS TYPE (natural or propane). The gas supply must be the same as stated on the burner system rating plate. **If the gas supply is different, DO NOT INSTALL**. Contact the dealer for immediate assistance.

**W A R N I N G**

Do not connect this appliance directly to a high-pressure natural gas line or an unregulated propane tank.

## TOOLS/ITEMS REQUIRED

The following are the minimum tools required for the installation of your unit. Additional tools may be required for your individual installation.

- appropriate tools/items for gas supply install
- drill bits and drivers (based on hardware used)
- soapy water solution and brush for leak detection
- propane gas-resistant pipe compound or Teflon tape
- manometer (for checking gas pressure)
- medium Phillips screwdriver
- small adjustable wrench
- cordless drill
- pliers

# WHEN USED AS A VENTED DECORATIVE APPLIANCE (PER ANSI Z21.60)

This appliance is for installation in a solid-fuel-burning fireplace with a working flue and constructed of noncombustible material.

This burner system may be installed as vented decorative appliance in compliance with ANSI Z21.60 and the National Fuel Gas Code. The minimum permanent free opening of the fireplace chimney or chimney damper must be met (see VENTING IMPORTANT INFORMATION section). Chimney damper must be fixed in a manner that will maintain the minimum permanent vent opening at all times. See below.

# DAMPER CLAMP INSTRUCTIONS (WHEN USE AS A VENTED DECORATIVE APPLIANCE)

**If the burner system is installed as a vented decorative appliance:**

**The chimney damper MUST be fully open when burning the unit.** The damper clamp with hex bolt is provided as a means to prevent full closure of the damper blade. It must be permanently installed.

Attach the damper clamp to the damper blade with pliers or a small adjustable wrench. See Fig. 14-1 through Fig. 14-3.

**Note:** Should the clamp not fit or fail to provide the permanent vent opening listed in the table found in the VENTING IMPORTANT INFORMATION section, have a permanent stop installed, remove the damper blade, or have the damper cut to provide the minimum permanent free opening required.

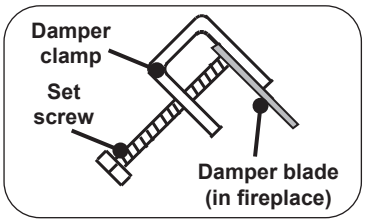


**Fig. 14-1**

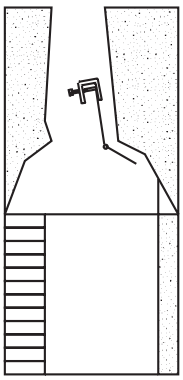

Open (during use)

**Fig. 14-2**

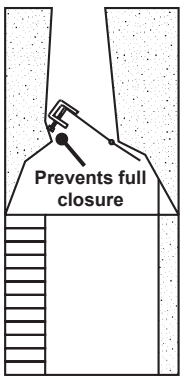


Closed

**Fig. 14-3**

**The damper clamp is not required if the burner system is installed as a vent-free room heater.**

# BURNER INSTALLATION

*Refer to the BURNER REPLACEMENT PARTS LIST towards the end of this manual when following installation instructions.*

**Important: When a stainless steel burner system is installed outdoors, ensure it is not directly exposed to the elements (precipitation, rain, wind, etc.).**

**Note:** When used as a vented appliance, ensure the damper has been installed (per the previous page) before proceeding.

24/30" standard burner model shown here. Stainless steel models install the same.

## INSTALL BURNER

1. MAKE SURE THE FIREPLACE GAS SUPPLY IS TURNED OFF.
2. Locate the gas-supply stub inside the fireplace and remove the cap, if attached (reference Fig. 15-1).

**CAUTION:** When removing the cap, make sure the stub does not turn, loosening the connection inside the wall.

3. Place the burner system in the fireplace. Center the burner from left to right. Make certain that no part of the burner assembly protrudes (forward) beyond the face of the fireplace. **DO NOT PUSH ALL THE WAY BACK**. See Fig. 15-2.
4. **Be sure gas to the fireplace is off.** Remove the adapter connected to the flex connector (pre-installed on the burner system). Attach the adapter to the gas-supply stub using a pipe compound resistant to all gases. Tighten securely. Then attach the open end of the flex connector to the adapter. Tighten securely. (See Fig. 15-1.)

**Important:** Ensure the burner is properly placed per step 3, and rests level on the fireplace floor. Adjust if necessary. See Fig. 15-2 and 15-3.

5. LEAK TEST: Make sure the valve system is in the **OFF** position. Turn on the fireplace gas supply, and test at all connections for leaks using the appropriate soapy water solution. See Fig. 15-4. If bubbles appear, a leak is present. Turn off the gas and tighten at all connections. Repeat until no leaks are present. If a leak persists, turn off the gas supply and contact the local gas company or dealer. NEVER USE A FLAME TO CHECK FOR LEAKS.

**At this stage the valve's remote system batteries are to be installed (if equipped).**

**Note: For models without a remote system, advance to the DECORATIVE MEDIA PLACEMENT section.**

**Note:** For the 01V series no remote installation is needed. Simply install the batteries in the remote transmitter and continue to DECORATIVE MEDIA PLACEMENT section. See INSTALL/REPLACE BATTERIES as needed.

**For models with a remote transmitter and a remote receiver, continue to the next page.**

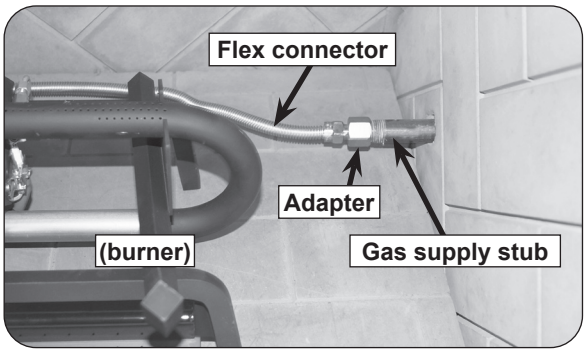


**Fig. 15-1** Connect gas supply

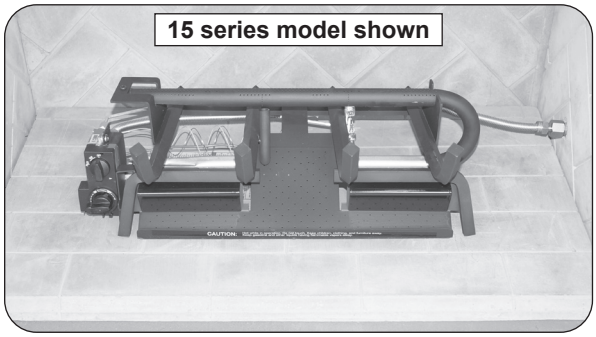


**Fig. 15-2** Center burner in fireplace

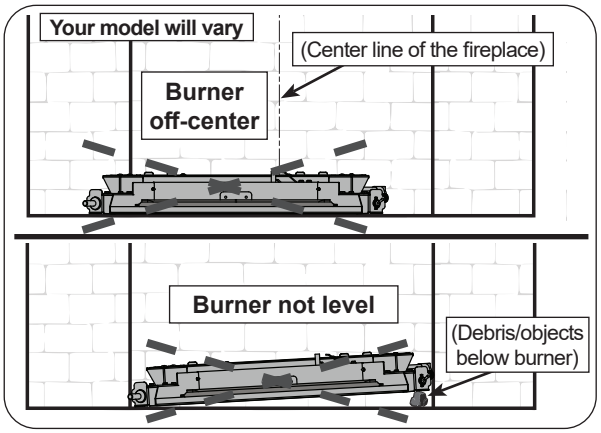


**Fig. 15-3** INCORRECT burner pan placement

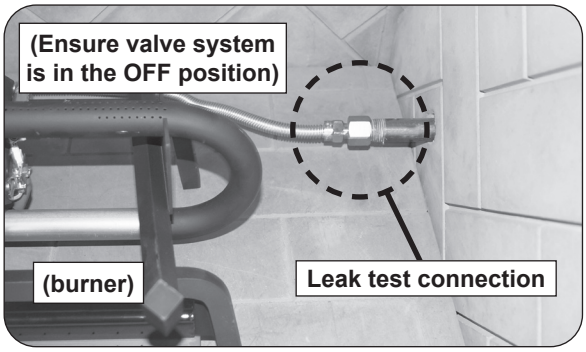


**Fig. 15-4** Perform a leak test

## INSTALL/REPLACE BATTERIES (IF APPLICABLE)

**CAUTION:** Ensure the unit is connected to the gas line and has been tested for leaks before you insert batteries.

**CAUTION:** Turn off the remote and/or burner and allow the unit to completely cool prior to <u>any</u> battery replacements.

**Important:** Prior to inserting batteries, always apply a small amount of dielectric grease to both ends of each battery. This will ensure conductivity and prevent moisture from affecting the contact.

**Important:** **Low/dead batteries will affect burner system operation. Replace batteries any time the burner will not turn on.**

## REMOTE TRANSMITTER BATTERY

### 12 and 15 series (if equipped)

The remote transmitter requires one 12V battery to operate (included). Locate the transmitter, remove the lid (found on rear), and properly insert the new battery as marked. Re-secure the lid. See Fig. 16-1.

### 01V series (if equipped)

The remote transmitter requires one 9V battery to operate (included). Locate the transmitter, remove the lid (found on rear), and properly insert the new battery as marked. Re-secure the lid. See Fig. 16-1.

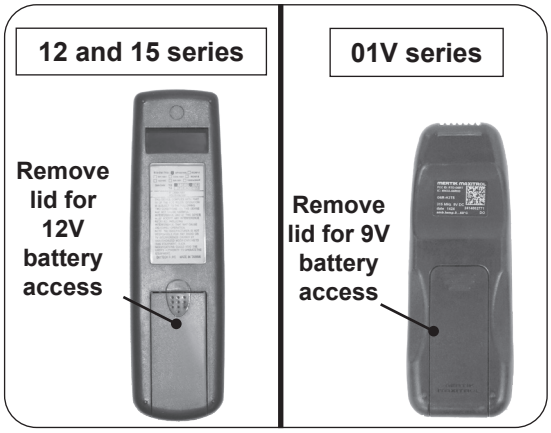


**Fig. 16-1** Transmitter battery

## REMOTE RECEIVER BATTERIES

### 12 and 15 series (if equipped)

The remote receiver requires 4 AA batteries to operate (included). Locate the remote receiver and turn it over. Slide open the lid, and properly insert the new batteries as marked. See Fig. 16-2.

Replace the lid, then re-position the remote receiver in the fireplace. (Ensure the plastic cover is properly in place over the receiver.)

**Important:** Be sure to replace the decorative heat shield over the receiver after battery replacement.

### 01V series (if equipped)

The control module requires 4 AA batteries to operate (included). Locate the control module connected to the burner valve. Slide open the lid, and properly insert the new batteries as marked. See Fig. 16-2.

Replace the lid.

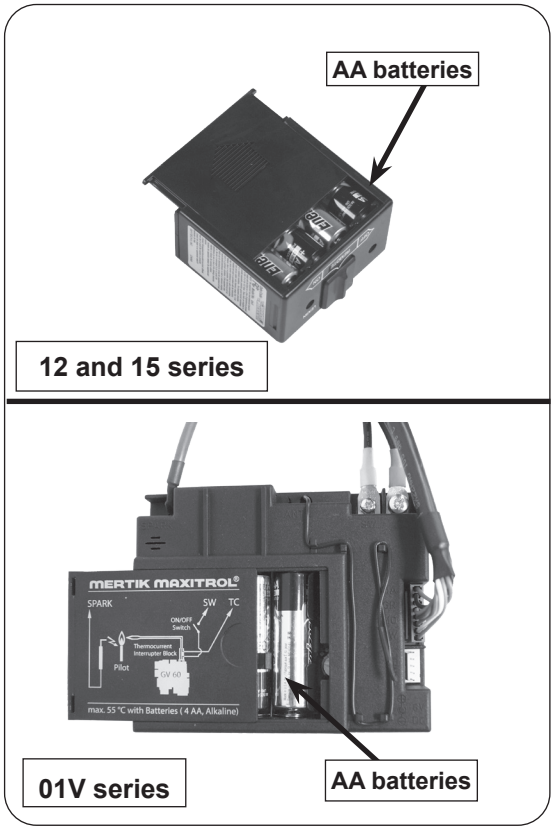


**Fig. 16-2** Remote receiver batteries

## INSTALL REMOTE RECEIVER (if equipped)

### 12 AND 15 SERIES ONLY:

1. Locate the wires coming off of the remote receiver, and connect them to the two male prongs found on the valve (see Fig. 17-1).
2. **Place the remote receiver at the front left corner of the fireplace.** Place as far from the burner system as possible. See Fig. 17-2.
3. Place the plastic cover over the remote receiver with the open side facing forward to allow access to the receiver controls. Then place the decorative heat shield. See Fig. 17-2.

**CAUTION: THE REMOTE RECEIVER AND DECORATIVE HEAT SHIELD WILL BE HOT DURING AND AFTER OPERATION.**

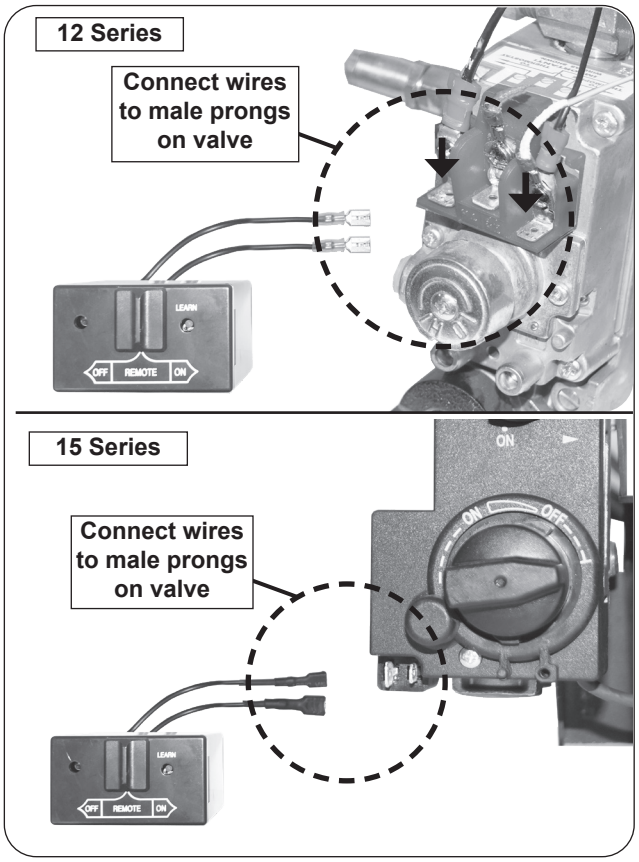


**Fig. 17-1** Connect remote receiver to valve

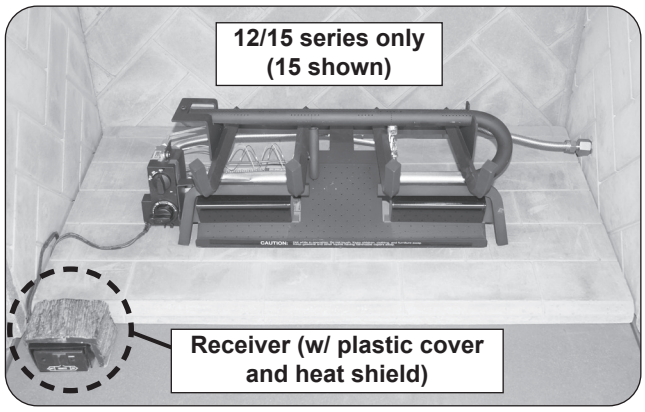


**Fig. 17-2** Place remote receiver

## PLACE DECORATIVE WOOD CHIP (if equipped)

Select burner models include a decorative wood chip. If equipped, place as instructed below.

**Note:** If a CHAB log set is purchased, store away the brown wood chip (if supplied) and use the white wood chip provided with the CHAB log set.

Place the wood chip in front of the valve, with at least 1" between it and the valve (see Fig. 18-1).

**CAUTION: Ensure the wood chip is placed at least 1" away from the valve to avoid overheating and damage to the valve. <u>If this minimum requirement of 1" clearance is not possible, DO NOT use the wood chip.</u>**

**CAUTION: THE WOOD CHIP WILL BE HOT DURING AND AFTER OPERATION.**

## LAVA GRANULES (DECORATIVE)

1. Spread the supplied <u>lava granules</u> on the floor of the fireplace; around the front and sides of the burner system (see Fig. 18-2). The lava granules may be placed around the remote receiver (as applicable). Leave the front of the receiver clear for control access.

**Note:** DO NOT place any lava granules on the burner system, or behind it.

## GLOWING EMBERS AND BRYTE COALS PLACEMENT

1. Place the <u>glowing embers</u> evenly over the entire surface of the ember burner as shown in Fig. 18-3. **Break up any clumps that may have developed during shipment. Store unused embers for later use/replacement.**

**Note:** Ensure the porcelainized panels are clean of all dust. Use a clean soft cloth if necessary. See Fig 18-3.

**Important:** Ensure the flash tube and carryover ports are kept clear at all times. See Fig. 18-4.

2. Separate the <u>bryte coals</u> into small pieces, and evenly place them over the glowing embers as shown in Fig. 18-5.

**CAUTION: It is <u>imperative</u> that all the ember burner ports are covered with embers.**

**DO NOT add any additional embers or bryte coals to this log set. Any additional embers or bryte coals may cause unsafe operation.**

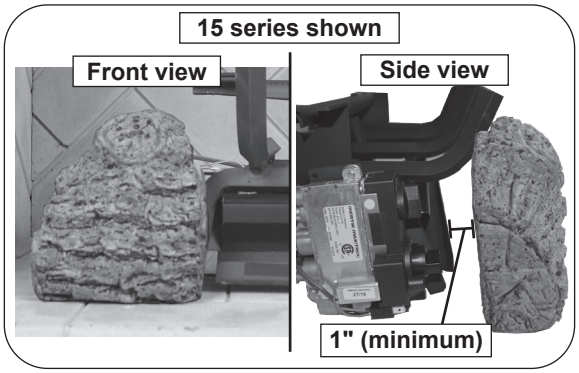


**Fig. 18-1** Place wood chip (if applicable)

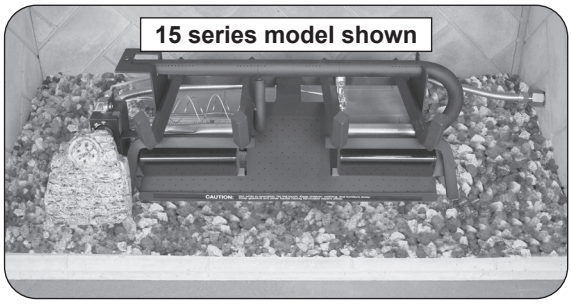


**Fig. 18-2** Place lava granules

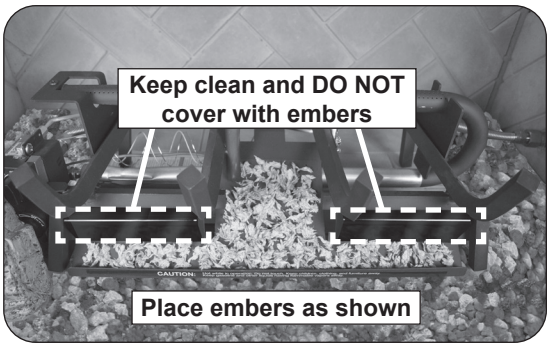


**Fig. 18-3** Place glowing embers

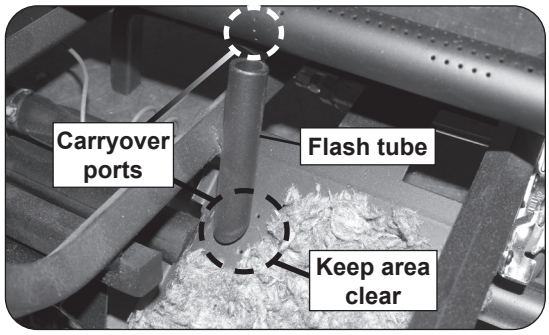


**Fig. 18-4** Keep flash tube & carryover ports clear

**Fig. 18-5** Place bryte coals

# LOG SET PLACEMENT

The log set is purchased separately. Many options are available. Contact your local dealer for ordering information if needed. **Follow the instructions included with the log set for step by step log placement.**

- Read all safety warnings and important information in the instructions supplied with the log set to ensure proper placement.
- DO NOT add any additional embers to this log set. Any additional embers will cause unsafe operation.
- Periodically check the positioning of the logs to ensure proper log placement.

**Below is an example of available log sets for this burner system:**

**Charred Frontier Oak (CHFR-24) shown**

**FOLLOW THE INSTRUCTIONS INCLUDED WITH YOUR SPECIFIC LOG SET TO COMPLETE LOG PLACEMENT.**

After setting the logs into position, ensure each is properly and firmly seated. The vent-free gas log set will not function as intended if the logs are not correctly positioned. When placed properly, the flames will not strike any portion of the logs. Periodically check the positioning of all logs to ensure proper log placement and stability. If any flame is striking the logs, recheck log placement. Adjust to conform with instructions. **There should be no flame impingement on the logs.**

**Important:** **Adequate spacing between the logs is NECESSARY and MUST be maintained.** If carbon build up (sooting) exists, correct log placement before sooting becomes worse. **If any sooting occurs outside of the firebox (i.e. on the walls), turn off unit immediately and contact a qualified professional service technician.**

**CAUTION:** **BURN HAZARD! Logs will remain hot for some time after use. Use heat resistant gloves or allow logs adequate time to cool before handling.**

**Proceed to the following page to perform a light and operation test.**

## CONTROL SETTINGS

Ensure that the log set and all decorative media have been installed and properly placed. Familiarize yourself with the control valve layout. This will assist you when operating the burner system. See Fig. 20-1 through 20-4 for the control positions of your specific valve series.

## LIGHTING TEST

Prior to proceeding with installation, perform a lighting test (see the LIGHTING INSTRUCTIONS for lighting your burner).

**IMPORTANT**

For all valves, the air **MUST** be purged from the gas line before the pilot will light and burn properly. The time needed to purge will depend on the length of the gas line to the unit and the amount of time since the unit or gas line was last used. It may take several minutes before all the air is purged and the pilot will light and burn properly. Reference the LIGHTING INSTRUCTIONS section in this manual.

## TEST CHECKLIST

1. Turn on the gas supply.
2. Refer to LIGHTING INSTRUCTIONS applicable to your valve series and follow the checklist below:
   - ☐ Light pilot (if applicable)
   - ☐ Inspect pilot - see section below
   - ☐ Light burner manually
   - ☐ Adjust flame height manually (if applicable)
   - ☐ Shut down burner
   - ☐ Light burner with remote (if applicable)
   - ☐ Adjust flame height with remote (if applicable)
   - ☐ Shut down burner
   - ☐ Shut down pilot (if applicable)
3. Turn off the gas supply.

## GAS PRESSURE

At this stage, the gas pressure is to be checked. Reference the CHECK GAS PRESSURE section on the next page for details.

## INSPECT PILOT FLAME

**CAUTION: Be careful around hot surfaces.**

Inspect the pilot flame. It should be a quiet, soft blue flame with yellow tipping that encircles the thermocouple. Refer to the LIGHTING INSTRUCTIONS and CHECKING THE ODS PILOT FLAME APPEARANCE sections specific to your valve series.

**CAUTION: After testing, ensure the unit and pilot are completely shutdown, and the gas supply is turned off. Allow the unit to completely cool.**

**Fig. 20-1** Manual valve operating positions

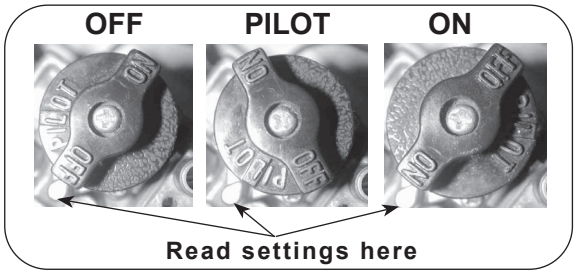


**Fig. 20-2** 12 valve operating positions

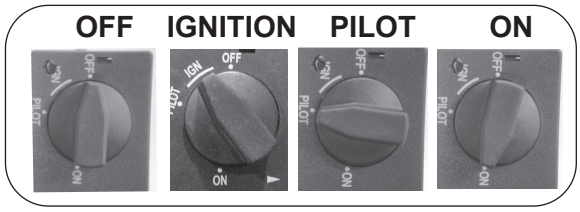


**Fig. 20-3** 15 valve operating positions

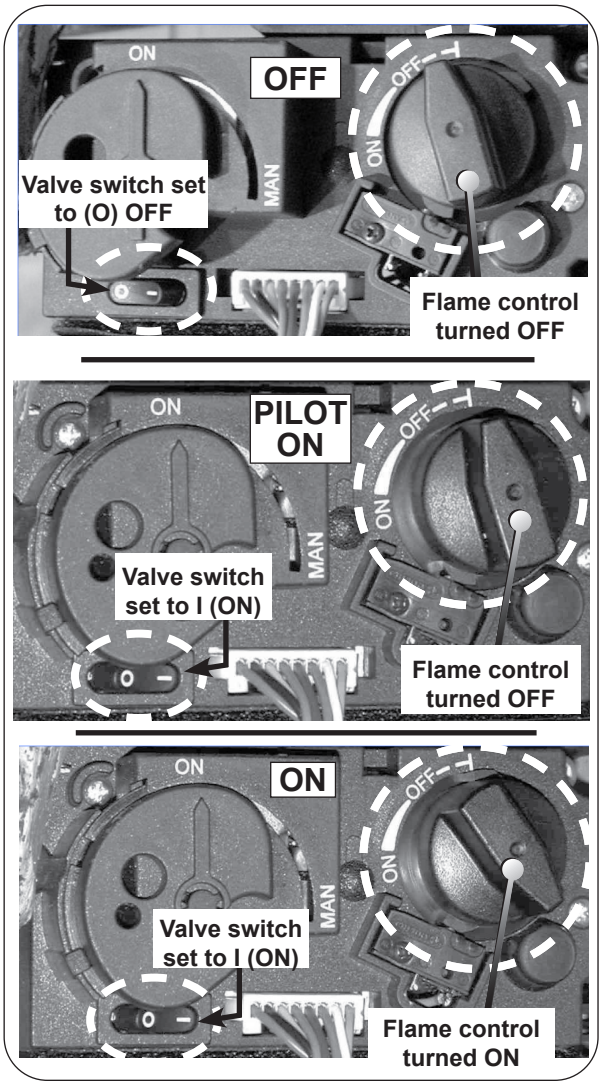


**Fig. 20-4** 01V valve operating positions

# CHECK GAS PRESSURE

**IMPORTANT**
Check the gas pressure with the system burning and the control fully **ON.**

The burner system and its main gas valve must be disconnected from the gas-supply piping system during any pressure testing of that system at test pressures in excess of $^1/_2$ psig (3.5 kPa). The burner system must be isolated from the gas-supply piping system by closing its equipment shutoff valve during any pressure testing of the gas-supply piping system at test pressures equal to or less than $^1/_2$ psig (3.5 kPa). This is accomplished by closing the gas-supply line valve.

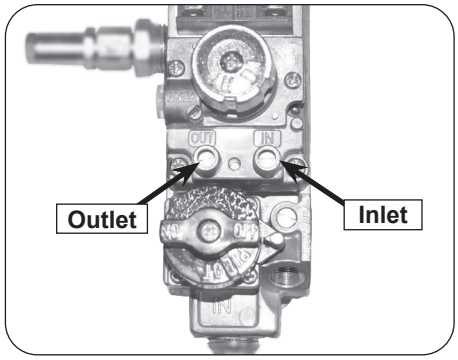

**Fig. 21-1** 12 valve: check pressure

## 12 VALVE

Check the valve regulator pressure at the pressure *inlet* point (see Fig. 21-1). Turn the inlet screw counterclockwise 2 or 3 turns and then place the tubing of the pressure gauge over the pressure *inlet* point. (The test "inlet" tap is marked **IN**.) After taking the pressure reading, turn the inlet screw clockwise firmly to reseal. Do not over-torque. Check for gas leaks.

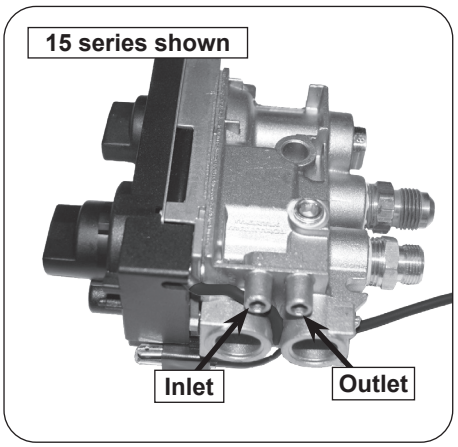

**Fig. 21-2** 01V & 15 valve: check pressure

## 01V AND 15 VALVE

Check the valve regulator pressure at the pressure *inlet* point (see Fig. 21-2). Turn the inlet screw counterclockwise 2 or 3 turns and then place the tubing of the pressure gauge over the pressure *inlet* point. (The test "inlet" tap is farthest to the gas-supply inlet.) After taking the pressure reading, turn the inlet screw clockwise firmly to reseal. Do not over-torque. Check for gas leaks.

## MANUAL VALVE

The pressure regulator is preset at the factory and locked to discourage tampering. If the pressure is not as specified, replace the regulator with the correct part from the PARTS LIST in this manual.

Remove the $^1/_8$" pressure tap screw plug, located on the side of the regulator body (see Fig. 21-3). Install fitting and tubing of pressure gauge. After taking the pressure reading, re-install the pressure tap screw and check for leaks.

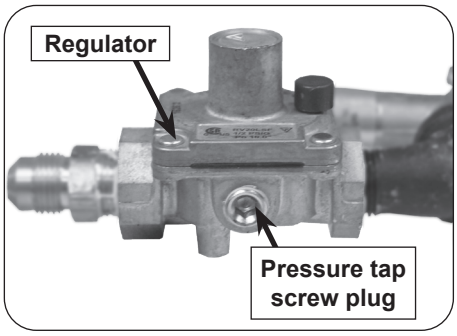

**Fig. 21-3** Manual valve: check pressure

## GAS PRESSURE SPECIFICATIONS

| NATURAL GAS | | PROPANE GAS | |
|---|---|---|---|
| Outlet pressure reading: (Flame adjustment on high) | 3.5" w.c. | Outlet pressure reading: (Flame adjustment on high) | 10" w.c. |
| Inlet pressure reading | Max. 10.5" w.c.<br>Min. 5" w.c. | Inlet pressure reading | Max. 13" w.c.<br>Min. 11" w.c. |

# COMPLETE THE INSTALLATION

**Follow these final steps to complete installation:**

1. Turn on the gas supply.
2. Refer to the LIGHTING INSTRUCTIONS section to light the pilot so that the burner system is ready for consumer use (not applicable for 01V series).
3. **Leave this owner's manual with the consumer. They MUST completely read and understand the OPERATION IMPORTANT INFORMATION section prior to operation.**

**If you experienced any issues during installation, refer to the TROUBLESHOOTING section.**

# OPERATION SAFETY INFORMATION

**Consumer:** Carefully read these instructions before operating this gas burner system. Be sure you understand all safety precautions and warnings contained in this manual.

## OPERATION SAFETY GUIDELINES

1. **BE CAREFUL: DO NOT MODIFY THIS VENT-FREE BURNER SYSTEM OR ITS CONTROLS. If not used correctly per these instructions, this product can cause serious personal injury, property damage, or loss of life.**
2. **SOLID FUELS MUST NOT BE BURNED** in a fireplace where a decorative appliance is installed.
3. **GLASS DOORS MUST BE FULLY OPEN** when this vent-free gas appliance is operating. This appliance **MUST NOT BE ON** if glass doors are closed, as it can lead to sooting, burner outages, and possibly explosion, causing damage or injury.
4. **WARNING: DO NOT ALLOW DRAFTS INTO OR AROUND THE FIREPLACE. CLOSE (SHUT) HEATING AND AIR CONDITIONING VENTS, RETURNS, AND OUTSIDE AIR VENTS. DO NOT ALLOW FANS TO BLOW DIRECTLY INTO THE FIREPLACE. AVOID ANY DRAFTS THAT ALTER BURNER FLAME PATTERNS.** Sooting, excess carbon monoxide, or ODS pilot outages may occur due to drafts.
5. **WARNING: DO NOT USE A BLOWER INSERT, HEAT EXCHANGER INSERT,** or any other accessory that is not specifically certified for use with this vent-free gas appliance.
6. When used as a vented appliance, the chimney damper MUST be fully open when burning the unit. The unit is designed to burn with yellow flames; thus adequate ventilation is absolutely necessary.
7. Make sure there is adequate combustion and ventilation air when this gas appliance is operating. You may need to crack the damper or open a window slightly.
8. **THIS APPLIANCE MUST BE MAINTAINED IN A WELL-CLEANED CONDITION AT ALL TIMES. REGULAR (AT LEAST ONCE PER YEAR) CLEANING OF THE BURNER AND ODS PILOT IS REQUIRED BY A QUALIFIED PROFESSIONAL SERVICE TECHNICIAN.**
9. To light this appliance, it may be necessary to purge the unit for longer than one minute after long periods of non-use.
10. If you operate this vent-free gas appliance fueled by L.P., operating characteristics may vary as the fuel in the tank approaches empty **(less than $^1/_4$ full)**. Sooting and other increases in combustion by-products will occur. Turn off the appliance, refill the L.P. tank, and have the burners cleaned.
11. During manufacturing, various parts of this unit are treated with oils or paints. Though not harmful, they may **produce an odor and slight smoke** as they are burned off during initial operation. This is a normal occurrence. Initial break-in period should **last four to six hours**; maximum ventilation should be provided by opening windows, doors, or chimney flue.
12. Keep the appliance area clear and free from combustible materials, gasoline, and other flammable vapors and liquids. Provide adequate clearance for accessibility for purpose of servicing and proper operation. Be especially cautious if this gas appliance is installed in a basement or converted garage.
13. **Do not place clothing or other flammable material on or near the appliance.** Matches, paper, garbage, or any other material must not be thrown on top of the burner, or into the flame.
14. **Young children should be carefully supervised when they are in the same room with this appliance.**
15. Children and adults should be alerted to the hazard of high surface temperature and should stay away to avoid burns or clothing ignition.
16. **This appliance is intended for supplemental heating, and is not a primary heating source.** Water vapor produced by vent-free burner systems can create moisture problems in a home when operated for extended periods of time. If condensation begins to occur, open your damper or a window.
17. **DO NOT** use this appliance if any part has been under water. Immediately call a qualified service technician to inspect the appliance and to replace any part of the control system and any gas control which has been under water. Attempted operation may result in fire or explosion resulting in property damage, personal injury or loss of life.

## OPERATION SAFETY INFORMATION (Cont.)

**18.** If the gas quality is poor or pressure low, your ODS pilot may not stay lit, the burners may produce soot, or the unit may backfire. Contact your local gas supplier immediately.

**19.** Adults MUST be present when this gas appliance is operating. This appliance MUST NOT be left burning when unattended or while anyone is sleeping.

**20.** Keep all foreign objects away from the pilot assembly and valve assembly at all times.

**21.** WARNING: Failure to keep the primary air opening(s) of the burner(s) clean may result in sooting and property damage.

**22. WARNING: All loose material shall be installed per this instruction manual. The application of excess loose material may adversely affect performance of the appliance. All previously applied loose material, such as embers, must be removed prior to reapplication. All replacement loose material must be purchased from RH Peterson Co.**

**23.** Unusually tight construction is defined as:

**a.** Walls and ceilings exposed to the outside atmosphere have a continuous water vapor retarder with a rating of 1 perm ($6x10^{11}$ kg per pa-sec-$m^2$) or less with openings that are sealed or use gaskets;

**b.** Weather stripping has been added on openable windows and doors; AND

**c.** Caulking or sealants are applied to areas such as joints around window and door frames; between sole plates and floors; between wall-ceiling joints; between wall panels; at penetrations for plumbing, electrical, and gas lines; and at other openings.

**24.** Burning candles, air fresheners and sprays will cause objectionable odors to be created by the vent-free burner system.

**25.** The remote receiver, decorative heat shield and decorative media will be hot during and after operation (as applicable).

**26. A fireplace screen must be in place when the appliance is operating.** Provisions for adequate combustion air must be maintained. Unless other provisions for combustion aire are provided, the screen shall have an opening(s) for introduction of combustion air. Combustion air is adequate when all flames curl into the fireplace and away from the screen.

**27.** Do not remove the rating plates or the warning tags. These are an integral safety and identification component of this appliance.

**28.** Be sure to read the ROUTINE MAINTENANCE & SERVICE and CLEANING AND SERVING sections.

## CLEANING AND SERVICING IMPORTANT INFORMATION

**It is imperative that you maintain your vent-free gas appliance by having it cleaned and serviced regularly. A qualified professional service technician shall inspect and service this unit at least annually. (Read and follow the ROUTINE MAINTENANCE, CLEANING AND SERVICING sections for details.)**

**Failure to provide reasonable and necessary maintenance as outlined in the owner's manual will cause your appliance to malfunction and will void your warranty.**

## BEFORE INITIAL USE

Ensure that:

- the unit has been properly installed and leak tested by a qualified professional service technician and as instructed in this manual.
- the log set and all decorative media have been installed and properly placed as instructed in this manual.
- you have read and understand all of the information in this manual.

## BEFORE EACH USE

Ensure that:

- the gas supply is turned on and the shut-off valve is open
- the propane tank/cylinder is not empty (if applicable)
- you smell around the area for gas. If you smell gas (and the burner valve is in **OFF** position), immediately shut off the gas supply and contact a qualified professional service technician or the gas supplier for inspection.
- the chimney damper is fully open (when used as a vented appliance)
- there are no obstructions in front of the fireplace
- any glass doors meet all requirements and are fully open (if applicable)
- there are batteries with an adequate power level in remote receiver and remote transmitter (as applicable)
- you inspect the overall installation for issues or missing components
- there is adequate combustion and ventilation air when this gas appliance is operating. You may need to crack open a window.

**Proceed to the LIGHTING INSTRUCTIONS specific to your model.**

# LIGHTING INSTRUCTIONS - MANUAL SERIES

## FOR YOUR SAFETY, READ BEFORE LIGHTING

**WARNING: If you do not follow these instructions exactly, a fire or explosion may result causing property damage, personal injury or loss of life. The decorative wood chip will be hot during and after operation. Be cautious around all hot surfaces.**

**Important:** **THE LOG SET AND ALL DECORATIVE MEDIA MUST BE INSTALLED AND PROPERLY PLACED BEFORE LIGHTING.**

**A.** This appliance has an ODS pilot that can be lit using the built-in piezo igniter, or by hand using a long fireplace match or lighter. When lighting the pilot, follow these instructions exactly.

**B.** **BEFORE LIGHTING,** smell all around the appliance area for gas. Be sure to smell next to the floor because some gas is heavier than air and will settle on the floor.

**WHAT TO DO IF YOU SMELL GAS**

- Do not try to light any appliance.
- Do not touch any electric switch; do not use any phone in your building.
- Immediately call your gas supplier from a neighbor's phone. Follow the gas supplier's instructions. If you cannot reach your gas supplier, call the fire department.

**C.** Use only your hand to push in or turn the gas control knob. Never use tools. If the knob will not push in or turn by hand, don't try to repair it. Call a qualified professional service technician. Force or attempted repair may result in fire or explosion.

**D.** Do not use this appliance if any part has been under water. Immediately call a qualified professional service technician to inspect the appliance and to replace any part of the control system and any gas control which has been under water.

## LIGHTING THE PILOT

**Note:** The control knob cannot be turned between **OFF/ PILOT/ON** unless the knob is pushed in slightly. Do not force.

1. STOP! Read the safety information above.
2. Locate the valve on the unit. Push in the gas control knob slightly and turn clockwise to **OFF** (Fig. 25-1).

**Wait five (5) minutes to clear out any gas. Then smell for gas, including near the floor. If you smell gas, STOP! Follow "B" in the safety information above. If you do not smell gas, go to the next step.**

3. Locate the pilot assembly on the burner sytem (see Fig. 25-2).
4. Push in the control knob slightly and turn counterclockwise to the **PILOT** position. Push the knob **firmly and fully** in and hold. Push the piezo igniter button several times until the pilot lights. Continue to hold the knob in for about one (1) minute after the pilot is lit. Release the knob and it will pop back out. The pilot will remain lit. See Fig. 25-1 and 25-2. If it goes out, repeat steps 2-4.

   Alternatively, a long-stem match/ long-necked butane lighter can be held near the thermocouple to light the pilot.

- If the knob does not pop up when released, stop, turn off the gas supply, and call your service technician or gas supplier.
- If the pilot will not stay lit after several tries, see SHUTTING DOWN section and contact a qualified professional service technician.

## LIGHTING THE BURNER

1. Ensure the pilot is burning. Push in the control knob slightly and turn counterclockwise to the **ON/HIGH** position (first stop past PILOT). See Fig. 25-1. The valve will open and the burner will light at maximum BTUs.

## ADJUSTING THE FLAME HEIGHT

Push in the control knob slightly and turn counterclockwise toward the **ON/LOW** position to decrease the flame height. Turn clockwise toward the **ON/HIGH** position to increase the flame height.

**Note:** Turning the control knob to the **PILOT** position will turn off the burner. The pilot will remain lit.

## SHUTTING DOWN

**To shut down the main burner (pilot will remain lit),** push in the control knob slightly and turn clockwise to the **PILOT** position(see Fig. 25-1).

**To shut down the burner and pilot (total shutdown),** push in the control knob slightly and turn clockwise to the **OFF** position (see Fig. 25-1).

**Note: Ensure the burner is completely off for one minute before relighting.**

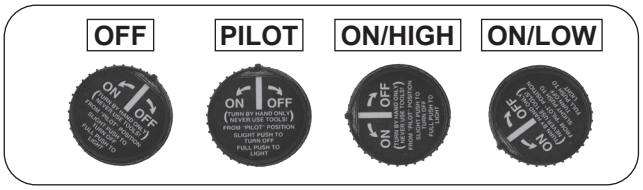


**Fig. 25-1** Gas control knob positions

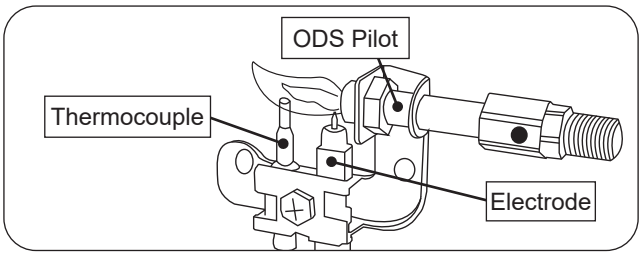


**Fig. 25-2** ODS Pilot assembly detail

# LIGHTING INSTRUCTIONS - 01V SERIES

## FOR YOUR SAFETY, READ BEFORE LIGHTING

**WARNING: If you do not follow these instructions exactly, a fire or explosion may result causing property damage, personal injury or loss of life. The decorative wood chip will be hot during and after operation. Be cautious around all hot surfaces.**

**Important:** **THE LOG SET AND ALL DECORATIVE MEDIA MUST BE INSTALLED AND PROPERLY PLACED BEFORE LIGHTING.**

**A.** This appliance has an ODS pilot that can be lit using the ignition device, or by hand using a long fireplace match or lighter. When lighting the pilot, follow these instructions exactly.

**B.** **BEFORE LIGHTING,** smell all around the appliance area for gas. Be sure to smell next to the floor because some gas is heavier than air and will settle on the floor.

**WHAT TO DO IF YOU SMELL GAS**

- Do not try to light any appliance.
- Do not touch any electric switch; do not use any phone in your building.
- Immediately call your gas supplier from a neighbor's phone. Follow the gas supplier's instructions. If you cannot reach your gas supplier, call the fire department.

**C.** Use only your hand to push in or turn the gas control knob. Never use tools. If the knob will not push in or turn by hand, don't try to repair it. Call a qualified professional service technician. Force or attempted repair may result in fire or explosion.

**D.** Do not use this appliance if any part has been under water. Immediately call a qualified professional service technician to inspect the appliance and to replace any part of the control system and any gas control which has been under water.

## LIGHTING THE PILOT

**Note:** This section addresses manual lighting. For automatic pilot lighting and remote operation, refer to the remote-system instruction manual supplied with your unit.

1. STOP! Read the safety information above.
2. Locate the valve on the unit. Turn the control knob clockwise to **OFF**, the manual knob clockwise to **MAN**, and place the ON/OFF switch in the **OFF (O)** position (Fig. 26-1).

**Wait five (5) minutes to clear out any gas. Then smell for gas, including near the floor. If you smell gas, STOP! Follow "B" in the safety information above. If you do not smell gas, go to the next step.**

3. Place the ON/OFF switch in the **ON (I)** position.
4. Locate the pilot assembly toward the center of the unit, near the main burner (see Fig. 26-2).
5. Push the manual pilot valve operator **firmly and fully** in and hold. Hold a long-stem match/ long-necked butane lighter near the thermocouple to light the pilot. Continue to hold the knob in for about one (1) minute after the pilot is lit. Release the manual pilot valve operator. The pilot will remain lit. See Fig. 26-1 and Fig. 26-2. If it goes out, repeat steps 2-5.

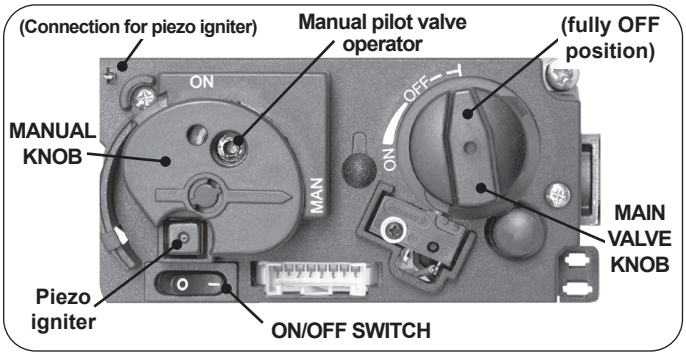


**Fig. 26-1** Combination control

Alternatively, the pilot can be lit using the piezo igniter. The ignition cable would need to be rewired to the valve. Refer to the remote system instruction for details.

If the pilot will not stay lit after several tries, see SHUTTING DOWN section and contact a qualified professional service technician.

## LIGHTING THE BURNER

1. Ensure the pilot is burning. Turn the manual knob counterclockwise to **ON.** Turn the control knob counterclockwise to **ON**. See Fig. 26-1. The valve will open and the burner will light.

## ADJUSTING THE FLAME HEIGHT

Turn the control knob counterclockwise toward **ON** to increase the flame height. Turn clockwise toward **OFF** to decrease the flame height.

**Note:** Turning the control knob to the fully **OFF** position will turn off the burner. The pilot will remain lit.

## SHUTTING DOWN

**To shut down the main burner (pilot will remain lit),** turn the control knob clockwise to the fully **OFF** position (see Fig. 26-1).

**To shut down the burner and pilot (total shutdown),** turn the control knob clockwise to the fully **OFF** position, and place the ON/OFF switch in the **OFF (O)** position (see Fig. 26-1).

**Note: Ensure the burner is completely off for one minute before relighting.**

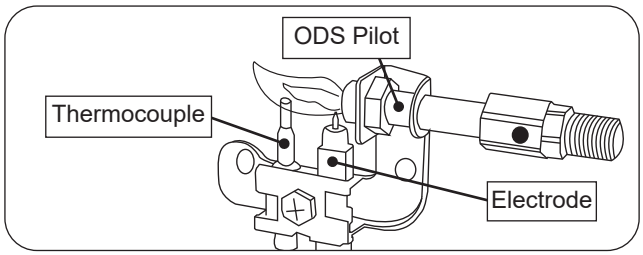


**Fig. 26-2** ODS Pilot assembly detail

# LIGHTING INSTRUCTIONS - 12 SERIES

## FOR YOUR SAFETY, READ BEFORE LIGHTING

**WARNING: If you do not follow these instructions exactly, a fire or explosion may result causing property damage, personal injury or loss of life. The decorative wood chip will be hot during and after operation. Be cautious around all hot surfaces.**

**Important:** **THE LOG SET AND ALL DECORATIVE MEDIA MUST BE INSTALLED AND PROPERLY PLACED BEFORE LIGHTING.**

**A.** This appliance has an ODS pilot that can be lit using the built-in piezo igniter, or by hand using a long fireplace match or lighter. When lighting the pilot, follow these instructions exactly.

**B.** **BEFORE LIGHTING,** smell all around the appliance area for gas. Be sure to smell next to the floor because some gas is heavier than air and will settle on the floor.

**WHAT TO DO IF YOU SMELL GAS**

- Do not try to light any appliance.
- Do not touch any electric switch; do not use any phone in your building.
- Immediately call your gas supplier from a neighbor's phone. Follow the gas supplier's instructions. If you cannot reach your gas supplier, call the fire department.

**C.** Use only your hand to push in or turn the gas control knob. Never use tools. If the knob will not push in or turn by hand, don't try to repair it. Call a qualified professional service technician. Force or attempted repair may result in fire or explosion.

**D.** Do not use this appliance if any part has been under water. Immediately call a qualified professional service technician to inspect the appliance and to replace any part of the control system and any gas control which has been under water.

## LIGHTING THE PILOT

1. STOP! Read the safety information above.
2. Locate the valve on the unit. Push in the gas control knob slightly and turn clockwise to **OFF** (Fig. 27-1).

**Note:** The control knob cannot be turned from **PILOT** to **OFF** unless the knob is pushed in slightly. Do not force.

**Wait five (5) minutes to clear out any gas. Then smell for gas, including near the floor. If you smell gas, STOP! Follow "B" in the safety information above. If you do not smell gas, go to the next step.**

3. Locate the pilot assembly on the burner system (see Fig. 27-3).
4. Turn the control knob counterclockwise to **PILOT**. Push the knob **firmly and fully** in and hold. Push the piezo igniter button several times until the pilot lights. Continue to hold the knob in for about one (1) minute after the pilot is lit. Release the knob and it will pop back out. The pilot will remain lit. See Fig. 27-1 and 27-3. If it goes out, repeat steps 2-4.

   Alternatively, a long-stem match/ long-necked butane lighter can be held near the thermocouple to light the pilot.

- If the knob does not pop up when released, stop, turn off the gas supply, and call your service technician or gas supplier.
- If the pilot will not stay lit after several tries, see SHUTTING DOWN section and contact a qualified professional service technician.

## LIGHTING THE BURNER

1. Ensure the pilot is burning. Turn the control knob counterclockwise to **ON** (see Fig. 27-1).
2. Flip the toggle switch to **ON** to ignite the burner (see Fig. 27-2). The valve will open and the burner will light.

## ADJUSTING THE FLAME HEIGHT

Turn the flame adjustment knob counterclockwise toward **LO** to decrease the flame height. Turn clockwise toward **ON** to increase the flame height. See Fig. 27-3.

## SHUTTING DOWN

**To shut down the main burner (pilot will remain lit),** flip the toggle switch to **OFF** (see Fig. 27-2).

**To shut down the burner and pilot (total shutdown),** flip the toggle switch to **OFF,** and push in the control knob slightly and turn clockwise to **OFF** (see Fig. 27-1 & 2).

**Note: Ensure the burner is completely off for one minute before relighting.**

**If a remote system is equipped, read and follow the separate remote instructions to operate the burner remotely.**

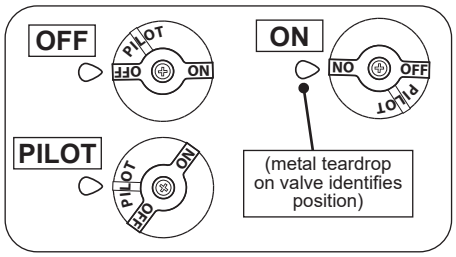


**Fig. 27-1** Gas control knob

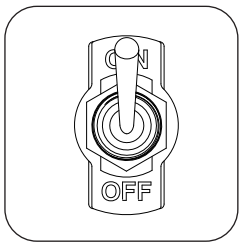


**Fig. 27-2** Toggle switch

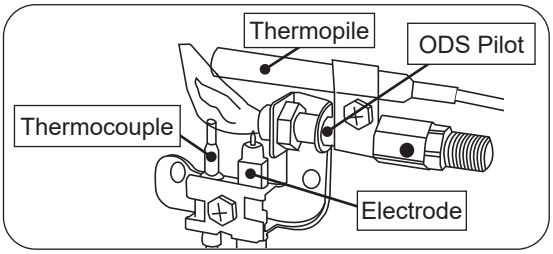


**Fig. 27-3** ODS Pilot assembly detail

# LIGHTING INSTRUCTIONS - 15 SERIES

## FOR YOUR SAFETY, READ BEFORE LIGHTING

**WARNING: If you do not follow these instructions exactly, a fire or explosion may result causing property damage, personal injury or loss of life. The decorative wood chip will be hot during and after operation. Be cautious around all hot surfaces.**

**Important: THE LOG SET AND ALL DECORATIVE MEDIA MUST BE INSTALLED AND PROPERLY PLACED BEFORE LIGHTING.**

**A.** This appliance has an ODS pilot that can be lit using the built-in piezo igniter, or by hand using a long fireplace match or lighter. When lighting the pilot, follow these instructions exactly.

**B.** **BEFORE LIGHTING,** smell all around the appliance area for gas. Be sure to smell next to the floor because some gas is heavier than air and will settle on the floor.

**WHAT TO DO IF YOU SMELL GAS**

- Do not try to light any appliance.
- Do not touch any electric switch; do not use any phone in your building.
- Immediately call your gas supplier from a neighbor's phone. Follow the gas supplier's instructions. If you cannot reach your gas supplier, call the fire department.

**C.** Use only your hand to push in or turn the gas control knob. Never use tools. If the knob will not push in or turn by hand, don't try to repair it. Call a qualified professional service technician. Force or attempted repair may result in fire or explosion.

**D.** Do not use this appliance if any part has been under water. Immediately call a qualified professional service technician to inspect the appliance and to replace any part of the control system and any gas control which has been under water.

## LIGHTING THE PILOT

1. STOP! Read the safety information above.
2. Locate the valve on the unit. Push in the ignition knob slightly and turn clockwise to **OFF** (see Fig. 28-1).

The ignition knob cannot be turned from **PILOT** to **OFF** unless the knob is pushed in slightly. Do not force.

**Wait five (5) minutes to clear out any gas. Then smell for gas, including near the floor. If you smell gas, STOP! Follow "B" in the safety information above. If you do not smell gas, go to the next step.**

3. Locate the pilot assembly on the burner system (see Fig. 28-2).
4. Turn the ignition knob counterclockwise toward **IGN** until it stops. Push the knob **firmly and fully** in and hold for 5 seconds (only pilot gas will flow).
5. While still holding the knob in, turn the knob counterclockwise to **PILOT** until you hear a click (piezo igniter will activate and light pilot). Continue to hold the knob in for about one (1) minute after the pilot is lit. Release the knob and it will pop back out. The pilot will remain lit. See Fig. 28-1 and 28-2. If it goes out, repeat steps 2-5.

   Alternatively, a long-stem match/ long-necked butane lighter can be held near the thermocouple to light the pilot.

- If the knob does not pop up when released, stop, turn off the gas supply, and call your service technician or gas supplier.
- If the pilot will not stay lit after several tries, see SHUTTING DOWN section and contact a qualified professional service technician.

## LIGHTING THE BURNER

1. Ensure the pilot is burning. Turn the ignition knob counterclockwise to **ON** (see Fig. 28-1).
2. Turn the control knob counterclockwise to the fully **ON** position to ignite the burner (see Fig. 28-1). The valve will open and the burner will light.

## ADJUSTING THE FLAME HEIGHT

Turn the control knob counterclockwise toward **ON** to increase the flame height. Turn clockwise toward **OFF** to decrease the flame height.

**Note:** Turning the control knob to the fully **OFF** position will turn off the burner. The pilot will remain lit.

## SHUTTING DOWN

**To shut down the main burner (pilot will remain lit),** turn the control knob clockwise to the fully **OFF** position (see Fig. 28-1).

**To shut down the burner and pilot (total shutdown),** turn the control knob clockwise to the fully **OFF** position, and push in the ignition knob slightly and turn clockwise to **OFF** (see Fig. 28-1).

**Note: Ensure the burner is completely off for one minute before relighting.**

**If a remote system is equipped, read and follow the separate remote instructions to operate the burner remotely.**

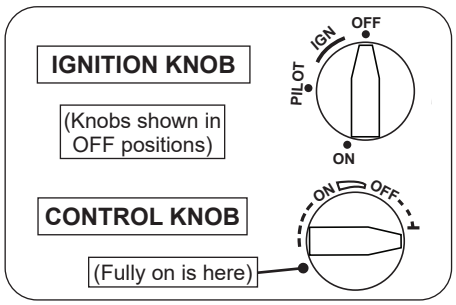


**Fig. 28-1** Ignition and control knobs

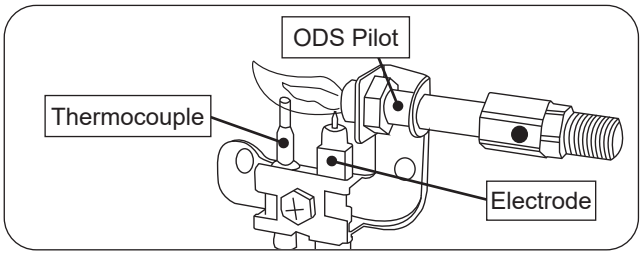


**Fig. 28-2** ODS Pilot assembly detail

**Installation, service, and repair must be done by an NFI Certified or other qualified professional service technician. The appliance, the fireplace, and the installation should be examined before use, and MUST be inspected annually. It must be checked for clean burning operation and proper ODS pilot appearance, with the correct tools to service this unit.** Refer to these instructions for details. Performing these procedures will ensure proper operation, appearance, and safety.

**Note: Regular cleaning and servicing will be necessary to ensure proper ODS pilot operation and proper burn characteristics.**

**Note:** Wear appropriate gloves and safety equipment needed during any serving or cleaning.

**WARNING:** Unless turning on the unit is required: Turn off the gas to the unit and allow it to completely cool prior to servicing or cleaning.

**A. It is imperative that all control components and compartments, burners, and circulating air passageways of the appliance be kept clean and free of all obstructions. Excessive lint can build up on this unit from carpeting, bedding material, pet hairs, or other particles in the air.** The ODS pilot is especially sensitive to a dirty environment and will not function properly if dirty. Refer to Fig. 29-1 and the CLEANING AND SERVICING THE ODS PILOT section to make certain all air openings are clean and free of obstructions, including:

- The air intake openings on the ODS pilot assembly.
- The ODS pilot opening.
- The air shutters on both the bottom ember burner and the top main burner.
- The flash tube and its corresponding carryover ports (see Fig. 29-1). Obstructions in or around the flash tube may result in the ember burner not lighting and/or an intermittent popping noise from the flash tube.

**WARNING:** Failure to keep the primary air openings of the burners clean may result in sooting and property damage.

- All of the ports on both the bottom ember burner and the top main burner. (See Fig. 29-1.)

In addition, a periodic examination and cleaning of the venting system of the solid-fuel-burning fireplace should be conducted by a qualified professional service technician.

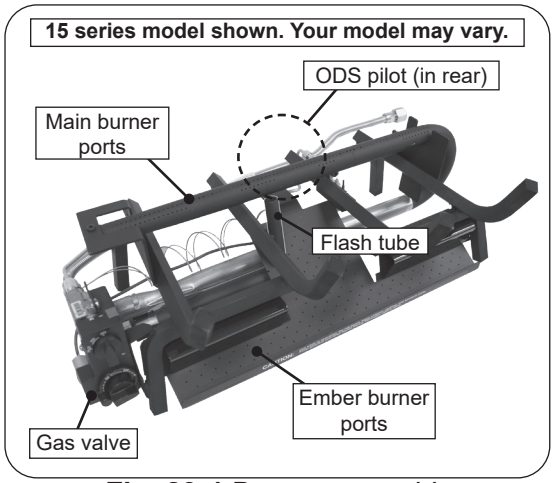


**Fig. 29-1** Burner assembly

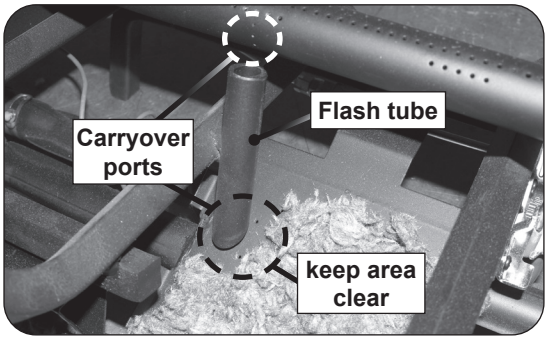


**Fig. 29-2** Flash tube and carryover ports

**B. Any safety screen, guard, or barrier removed for servicing an appliance must be replaced prior to operating the burner system.**

**C.** Verify proper operation after servicing.

**D.** If, after a period of use, the flames start to exhibit unusual shapes and behavior, or the burners fail to ignite smoothly, the burner may require cleaning or servicing. If this happens, it is recommended to contact the nearest dealer to get the appliance serviced.

**E. Do not remove the rating plates or the warning tags. These are an integral safety and identification component of this appliance.**

**F.** Discoloration is common on the grate after burning.

**G. More frequent cleaning and maintenance may be necessary when burning propane gas than with natural gas.**

**H. Do not use ammonia based or chlorinated cleaners when cleaning log set.**

## INSPECT OVERALL INSTALLATION

When the unit is cool, inspect the installation. See the list below, the following service sections, and review the BURNER INSTALLATION sections as needed.

- The damper clamp is installed (when used as a vented appliance).
- The burner is properly connected to the gas supply, and positioned and secured in the fireplace.
- The log set and all decorative media are properly placed. No additional media has been placed on the burner assembly.
- The pilot assembly is clear of all media and foreign objects.
- The remote receiver is properly connected and located, with functioning batteries (if applicable).
- Lava granules decorative media is only placed on the floor of the fireplace; around the front and sides of the burner.
- Ensure the wood chip is placed at least 1" away from the valve to avoid overheating and damage to the valve.
- The pilot and burner flames are burning properly.

## REPLACE THE BATTERIES (if applicable)

**Important:** Low/dead batteries will affect burner system operation. Replace batteries any time the burner will not turn on.

**Important:** Be sure to replace the decorative heat shield(s) over remote receiver after battery replacement, and to properly re-position the items in the fireplace.

Prior to inserting batteries:

- ensure the unit is connected to the gas line, has been tested for leaks, and is off and cool.
- apply a small amount of dielectric grease to both ends of each battery. This will ensure conductivity and prevent moisture from affecting the contact.

Replace the batteries as applicable. Refer to the INSTALL/REPLACE BATTERIES(if applicable) section found in BURNER INSTALLATION, if needed.

## SYNC THE REMOTE SYSTEM (as applicable)

### 12 series (if equipped)

Ensure the burner system is off and completely cool.

Locate the 3-position switch on the remote receiver and slide it to the **REMOTE** position. Use the tip of a pen or a wire clip to push the **LEARN** button and release. See Fig. 30-1. A beep will be heard. Then press and hold the **ON** button on the remote transmitter; a series of beeps should be heard. The remote system is now synced. Light burner to test.

### 15 series (if equipped)

Ensure the burner system is off and completely cool.

Locate the 3-position switch on the remote receiver and slide it to the **REMOTE** position. Use the tip of a pen or a wire clip to push the **LEARN** button and release. See Fig. 30-1. A beep will be heard. Then press and hold the **ON/HI** button on the remote transmitter; a series of beeps should be heard. The remote system is now synced. Light burner to test.

### 01V series

Ensure the burner system is off and completely cool.

Locate the **RESET** button on the control module (attached to valve). Press and hold the **RESET** button (Fig. 30-1)until you hear two acoustic signals. After the second longer acoustic signal release **RESET** button. Within the subsequent 20 seconds press the (small flame) button on the remote transmitter until you hear an additional long signal confirming the code is set.

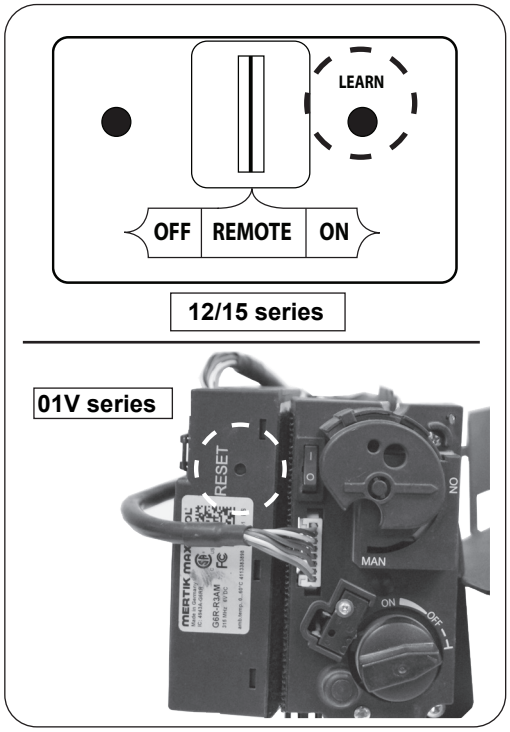


**Fig. 30-1** Remote receiver sync detail

## INSPECT BURNER FLAME APPEARANCE

Observe the flames. The main burner flames should be blue at the base and a combination of blue/yellow at the body and at the tips. They should be 5" to 8" above the front logs. The ember flames should be a 1/4" above the embers. See Fig. 30-2.

**Fig. 30-2** Inspect flame appearance

Only limited cleaning will be required under normal use of the burner system. **Do not use ammonia based or chlorinated cleaners when cleaning the log set.**

## TO CLEAN THE BURNER SYSTEM

1. Remove the log set and embers. Use a vacuum cleaner to remove loose particles from all surfaces of the system. Do not use cleaning fluids.
2. Dust the assembly and the burners. Using a compressed air duster (commonly available at computer, electronic, or office supply stores) blow through the flash tube, carry over ports, and all of the burner ports. See Fig. 31-1 for locations.
3. Reinstall the embers and log set. Refer to the DECORATIVE MEDIA PLACEMENT section and LOG SET instructions as needed.

**WARNING: All loose material shall be installed per this instruction manual. The application of excess loose material may adversely affect performance of the appliance. All previously applied loose material, such as embers, must be removed prior to reapplication. All replacement loose material must be purchased from RH Peterson Co.**

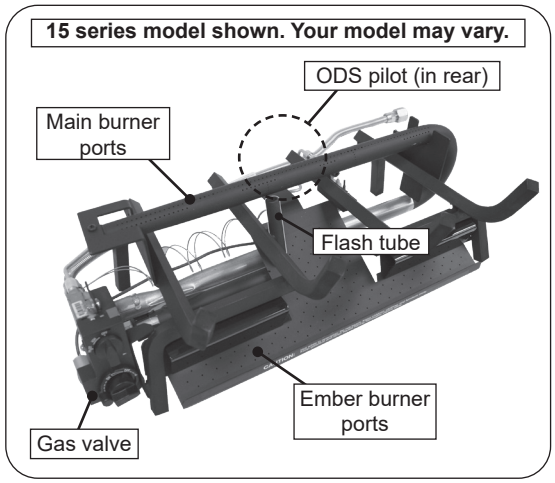


**Fig. 31-1** Burner assembly

Be sure to read the ROUTINE MAINTENANCE & SERVICE section. During periods of heavy use, inspect the burner system frequently for evidence of sooting. If sooting is present, discontinue use until the source of sooting is corrected.

## CLEANING AND SERVICING THE ODS PILOT

Periodic cleaning and maintenance of the burner system is recommended to ensure that the burner system operates properly. Cleaning of the ODS pilot system is an important part of the maintenance program.

**This ODS pilot cleaning procedure must be performed by a qualified professional service technician familiar with the specific characteristics of the burner system.**

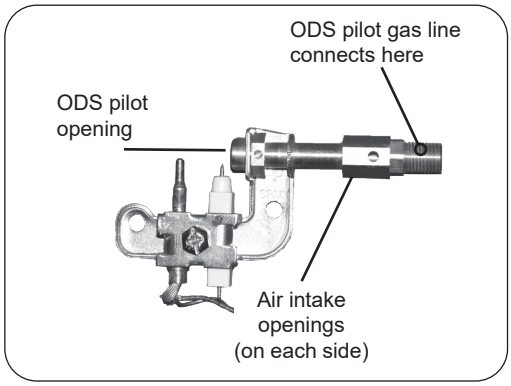


**Fig. 31-2** ODS pilot openings

1. Turn the burner system to the **OFF** position and allow it to cool. Inspect the ODS pilot area (see Fig. 31-2) for any visual contamination or debris (usually lint, hair, spider webs, or small insects). Lightly brush off all external surfaces while vacuuming loosened debris from the ODS pilot opening. **Be careful not to brush any foreign material into the ODS pilot opening.**
2. Clean out the air intake openings (see Fig. 31-2) by lightly brushing around the openings while vacuuming.

**Note:** It is very important that the air intake openings be kept clear of debris. Should the openings become blocked, the ODS pilot system will not operate properly.

3. Light the ODS pilot according to the relevant LIGHTING INSTRUCTIONS page. Periodically verify the ODS pilot flame appears as shown in the CHECKING THE ODS PILOT FLAME APPEARANCE section on the following page.
4. If the ODS pilot flame does not burn as indicated in the instructions, extinguish the ODS pilot by turning the valve to the full **OFF** position. Using a compressed air duster, insert the flexible nozzle through the air intake openings, ensuring that the nozzle is pointed toward the ODS pilot opening (see Fig. 31-2). Blow air through the intake openings to clear out any debris that may be in the system.
5. Relight the ODS pilot and inspect it to be sure it is burning as shown in the instructions. If not, extinguish the ODS pilot and **turn off the gas supply to the burner system.** Using an adjustable or a 1/4" wrench, disconnect the ODS pilot gas line (see Fig. 31-2) from the valve.
6. Insert the flexible nozzle of the compressed air duster and blow air into the input end of the ODS pilot gas line to remove any blockages. **Do not blow air directly into the ODS pilot opening. Blow air in the direction of the gas flow.**
7. Reinstall the ODS pilot gas line and check for leaks.
8. Light the ODS pilot to make sure it is operating properly (see LIGHTING INSTRUCTIONS).
9. If the ODS pilot still does not operate properly, the ODS pilot may need to be replaced with your relevant valve series.

# CHECKING THE ODS PILOT FLAME APPEARANCE

**WARNING: NO ADJUSTMENTS ARE TO BE MADE TO THE ODS PILOT SYSTEM. TAMPERING WITH THIS SYSTEM CAN BE EXTREMELY HAZARDOUS.**

When installing the burner assembly, it is important to visually check the ODS pilot flame and the burner flames.

1. The ODS pilot flame must be present when the burner is operating. The flame should touch the top of the thermocouple tip (Fig. 32-1 or Fig. 32-3).
2. If the ODS pilot flame does not touch the top of the thermocouple tip, then the main burner will not function properly (see Fig. 32-2 or Fig. 32-4 for incorrect ODS pilot flame).
3. With the burner off and the ODS pilot flame off, and the assembly cool, check the burner assembly, air intake openings on the ODS pilot, and air shutter openings on the burner for any blockages that could affect the operation of the ODS pilot flame.

## ODS Pilot for Manual, 01V and 15 series

(NG shown)

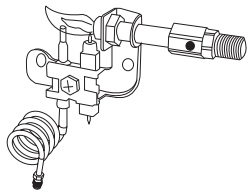

Correct ODS pilot flame
**Fig. 32-1**

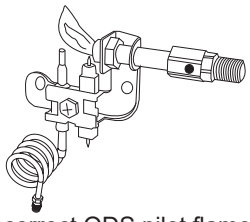

Incorrect ODS pilot flame
**Fig. 32-2**

## ODS Pilot for 12 series

(NG shown)

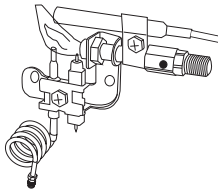

Correct ODS pilot flame
**Fig. 32-3**

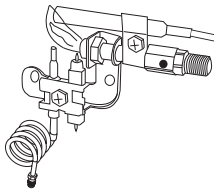

Incorrect ODS pilot flame
**Fig. 32-4**

# BURNER REPLACEMENT PARTS LIST - MANUAL SERIES

**Note: Photos not to scale**

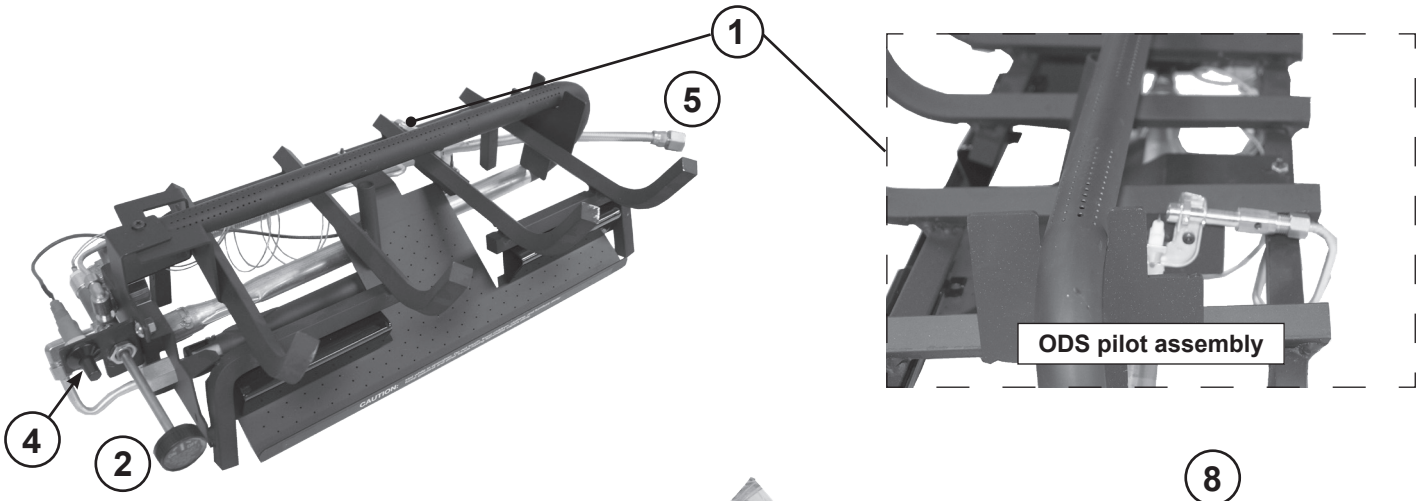


**24/30" model shown**

**Standard model shown here. Burner system is also available in stainless steel.**

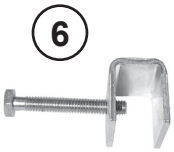

**Replacement parts can be ordered from your local Real Fyre dealer.**

**The log set is purchased and packaged separately; contact your local dealer when ordering. Refer to the instructions included with the log set.**

| | | 16/18" model | | 24/30" model | |
|---|---|---|---|---|---|
| **Item** | **Description** | **Part No.** | **Qty.** | **Part No.** | **Qty.** |
| 1. | ODS pilot assembly (natural) | ODS-0001 | 1 | ODS-0001 | 1 |
| or | ODS pilot assembly (propane) | ODS-0002 | 1 | ODS-0002 | 1 |
| 2. | Control valve (natural) | SV-26 | 1 | SV-26 | 1 |
| or | Control valve (propane) | SV-27 | 1 | SV-27 | 1 |
| 3. | Pressure regulator (natural)* | PR-2NAT | 1 | PR-2NAT | 1 |
| or | Pressure regulator (propane)* | PR-1LP | 1 | PR-1LP | 1 |
| 4. | Piezo igniter | PZ-1 | 1 | PZ-1 | 1 |
| 5. | Flex connector (w/ adapter), 3/8" O.D. X 30" | CK-10 | 1 | CK-10 | 1 |
| 6. | Damper clamp | DC-1 | 1 | DC-1 | 1 |
| 7. | Glowing embers | EM-5 | 1 | EM-10 | 1 |
| 8. | Bryte coals | EMV-1 | 1 | EMV-1 | 1 |
| 9. | Lava granules | LF-5 | 1 | LF-5 | 1 |

* Not shown

# BURNER REPLACEMENT PARTS LIST - 01V SERIES

**Note: Photos not to scale**

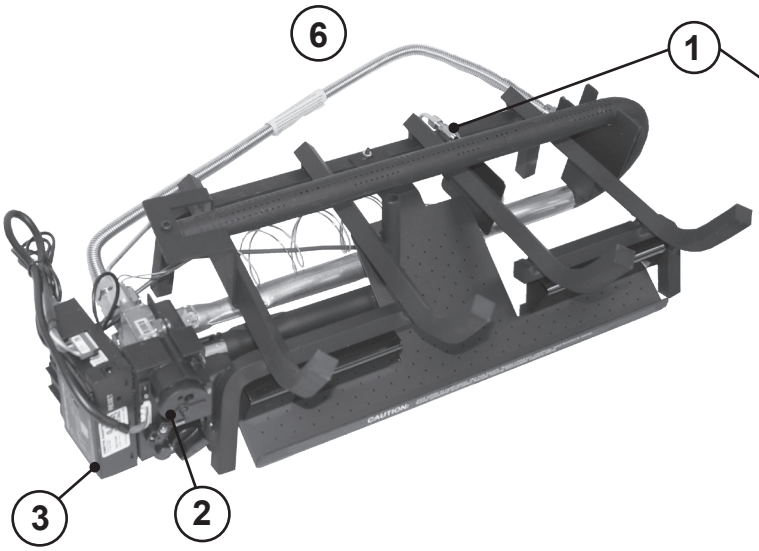


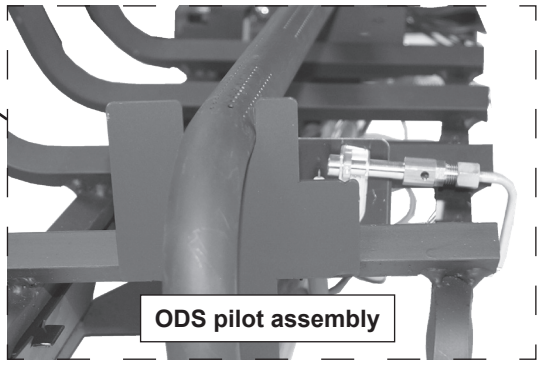

**24/30" model shown**

**Standard model shown here. Burner system is also available in stainless steel.**

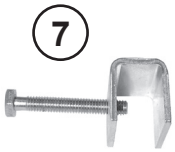

**Replacement parts can be ordered from your local Real Fyre dealer.**

**The log set is purchased and packaged separately; contact your local dealer when ordering. Refer to the instructions included with the log set.**

| Item | Description | 16/18" model Part No. | 16/18" model Qty. | 24/30" model Part No. | 24/30" model Qty. |
|---|---|---|---|---|---|
| 1. | ODS pilot assembly (natural) | ODS-0005 | 1 | ODS-0005 | 1 |
| or | ODS pilot assembly (propane) | ODS-0006 | 1 | ODS-0006 | 1 |
| 2. | Control valve (natural) | SV-42 | 1 | SV-42 | 1 |
| or | Control valve (propane) | SV-41 | 1 | SV-41 | 1 |
| 3. | Control module and receiver | AR-01V-2 | 1 | AR-01V-2 | 1 |
| 4. | Remote transmitter | AT-01V-2 | 1 | AT-01V-2 | 1 |
| 5. | Decorative wood chip | WC-1-5 | 1 | WC-1-5 | 1 |
| 6. | Flex connector (w/ adapter), 3/8" O.D. X 30" | CK-10 | 1 | CK-10 | 1 |
| 7. | Damper clamp | DC-1 | 1 | DC-1 | 1 |
| 8. | Glowing embers | EM-5 | 1 | EM-10 | 1 |
| 9. | Bryte coals | EMV-1 | 1 | EMV-1 | 1 |
| 10. | Lava granules | LF-5 | 1 | LF-5 | 1 |

# BURNER REPLACEMENT PARTS LIST - 12 SERIES

**Note: Photos not to scale**

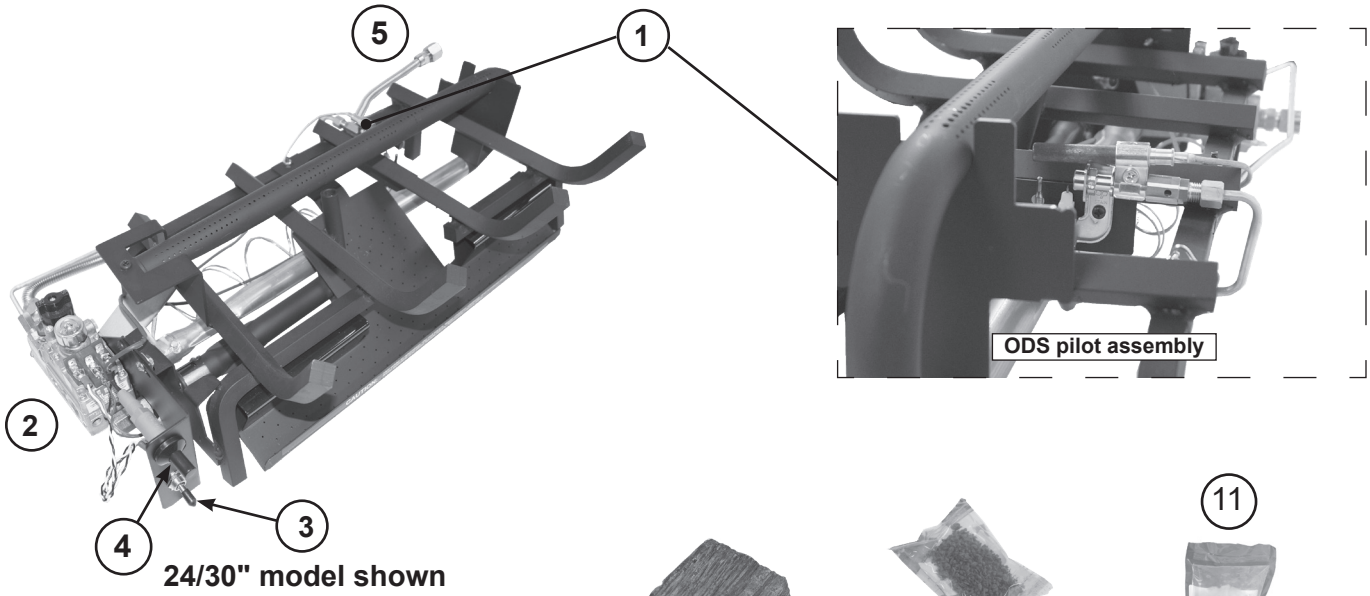


**24/30" model shown**

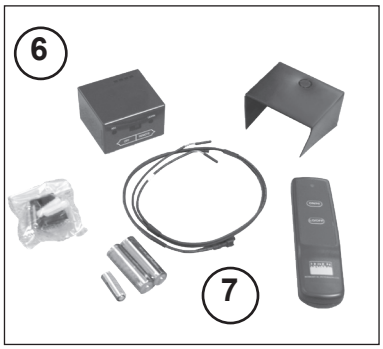

**Replacement parts can be ordered from your local Real Fyre dealer.**

**The log set is purchased and packaged separately; contact your local dealer when ordering. Refer to the instructions included with the log set.**

| | | 16/18" model | | 24/30" model | |
|---|---|---|---|---|---|
| **Item** | **Description** | **Part No.** | **Qty.** | **Part No.** | **Qty.** |
| 1. | ODS pilot assembly (natural) | ODS-0003 | 1 | ODS-0003 | 1 |
| or | ODS pilot assembly (L.P.) | ODS-0004 | 1 | ODS-0004 | 1 |
| 2. | Control valve (natural) | SV-8 | 1 | SV-8 | 1 |
| or | Control valve (L.P.) | SV-8P | 1 | SV-8P | 1 |
| 3. | Toggle switch | SW-2 | 1 | SW-2 | 1 |
| 4. | Piezo igniter | PZ-1 | 1 | PZ-1 | 1 |
| 5. | Flex connector (w/ adapter), 3/8" O.D. X 30" | CK-10 | 1 | CK-10 | 1 |
| 6. | Remote kit * (includes receiver, transmitter, batteries, plastic cover) | RR-1A | 1 | RR-1A | 1 |
| 7. | Remote transmitter (only) * | AT-R1-1 | 1 | AT-R1-1 | 1 |
| 8. | Decorative heat shield * | HS-36 | 1 | HS-36 | 1 |
| 9. | Damper clamp | DC-1 | 1 | DC-1 | 1 |
| 10. | Glowing embers | EM-5 | 1 | EM-10 | 1 |
| 11. | Bryte coals | EMV-1 | 1 | EMV-1 | 1 |
| 12. | Lava granules | LF-5 | 1 | LF-5 | 1 |

* If equipped

# BURNER REPLACEMENT PARTS LIST - 15 SERIES

**Note: Photos not to scale**

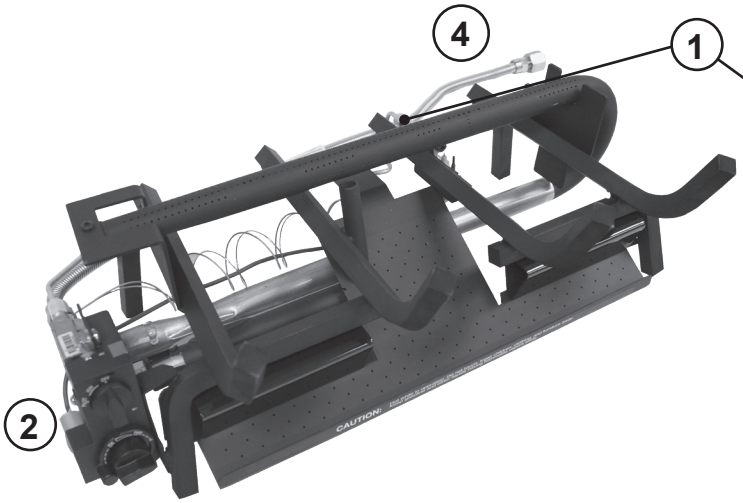


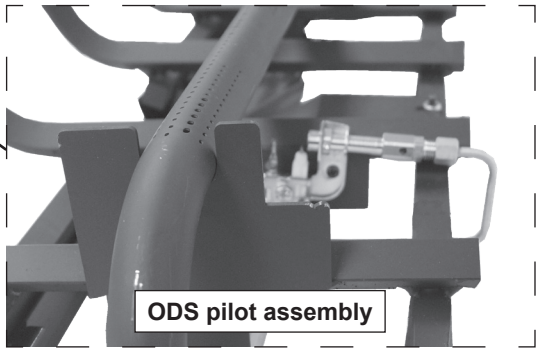


**24/30" model shown**

**Standard model shown here. Burner system is also available in stainless steel.**

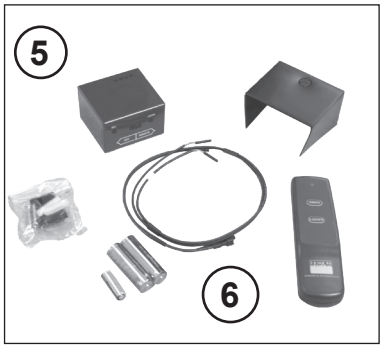


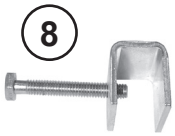

**Replacement parts can be ordered from your local Real Fyre dealer.**

**The log set is purchased and packaged separately; contact your local dealer when ordering. Refer to the instructions included with the log set.**

| | | 16/18" model | | 24/30" model | |
|---|---|---|---|---|---|
| **Item** | **Description** | **Part No.** | **Qty.** | **Part No.** | **Qty.** |
| 1. | ODS pilot assembly (natural) | ODS-0001 | 1 | ODS-0001 | 1 |
| or | ODS pilot assembly (propane) | ODS-0002 | 1 | ODS-0002 | 1 |
| 2. | Control valve (natural) | SV-24 | 1 | SV-24 | 1 |
| or | Control valve (propane) | SV-25 | 1 | SV-25 | 1 |
| 3. | Decorative wood chip | WC-1-5 | 1 | WC-1-5 | 1 |
| 4. | Flex connector (w/ adapter), 3/8" O.D. X 30" | CK-10 | 1 | CK-10 | 1 |
| 5. | Remote kit * (includes receiver, transmitter, batteries, plastic cover) | VR-1A | 1 | VR-1A | 1 |
| 6. | Remote transmitter (only) * | AT-V1-1 | 1 | AT-V1-1 | 1 |
| 7. | Decorative heat shield * | HS-36 | 1 | HS-36 | 1 |
| 8. | Damper clamp | DC-1 | 1 | DC-1 | 1 |
| 9. | Glowing embers | EM-5 | 1 | EM-10 | 1 |
| 10. | Bryte coals | EMV-1 | 1 | EMV-1 | 1 |
| 11. | Lava granules | LF-5 | 1 | LF-5 | 1 |

* If equipped

# WIRING DIAGRAMS

## 01V SERIES

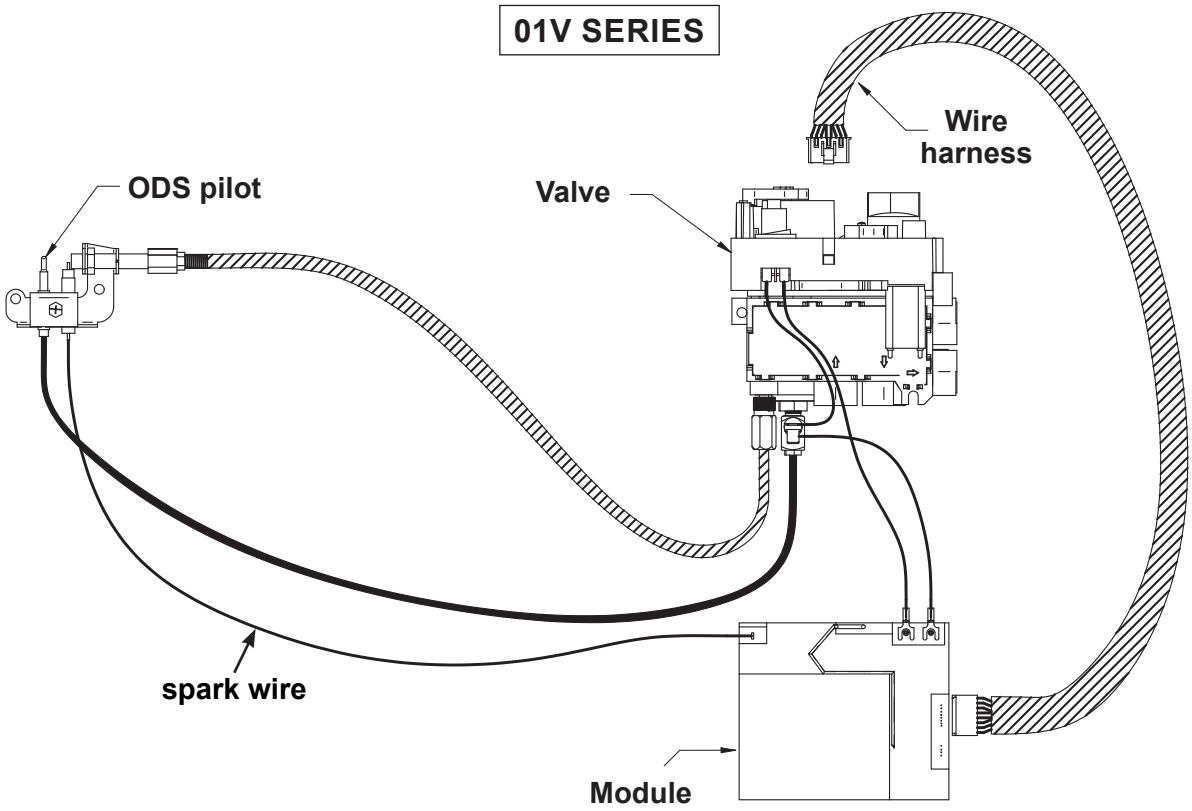


## 12 SERIES

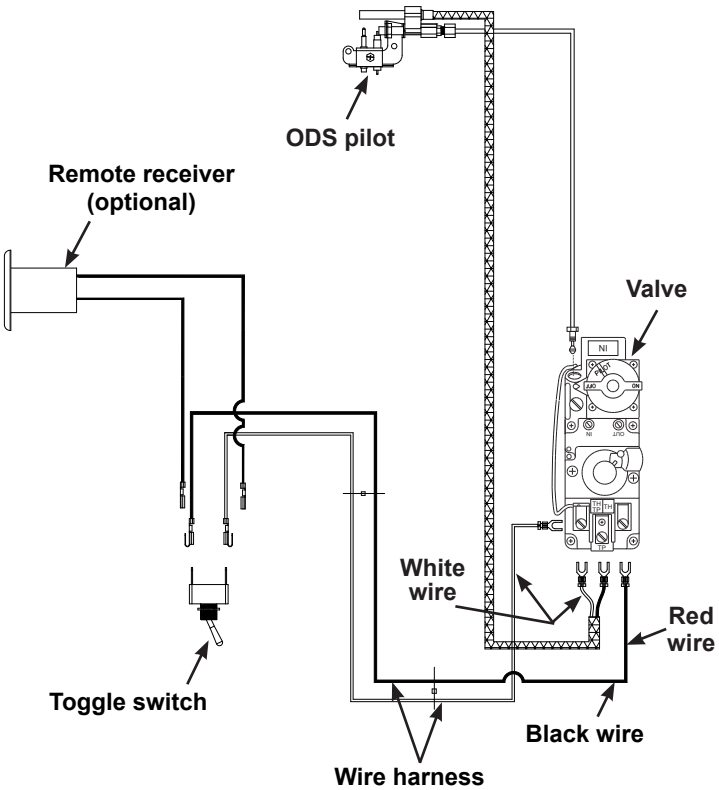


## 15 SERIES

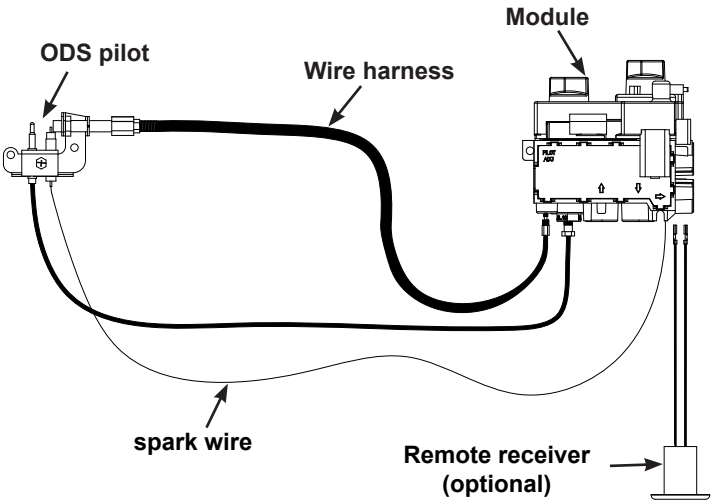

# NOTES PAGE

Please use this page to record any information that you may want to have at hand.

## VERIFICATION CHECKLIST

Prior to proceeding with troubleshooting, make sure of the following:

- the minimum fireplace size requirements are met
- the minimum ventilation requirements have been met.
- the gas pressure is within the minimum/maximum range (with unit on and unit off)
- the burner system is connected to the correct gas type
- the ash lip/recess requirements are met
- the gas supply is turned on and the shut-off valve is open
- the propane tank/cylinder is not empty (if applicable)
- the chimney damper clamp is fully open (when used as a vented appliance)
- the damper clamp is installed to meet the minimum permanent free opening requirements (if applicable)
- there are no obstructions in front of the fireplace
- any glass doors meet all requirements and are fully open (if applicable)
- there are fresh batteries in the remote receiver and transmitter (as applicable)
- primary opening(s) of the burner are clear and clean
- all drafts are eliminated that blow directly into the fireplace
- a window is slightly cracked
- all decorative media is properly placed
- rear vent on burner system is kept clear from glass media

**After verifying the information above, if an issue still exists, continue to the TROUBLESHOOTING ISSUES section on the next page.**

**ONLY A QUALIFIED PROFESSIONAL SERVICE TECHNICIAN SHOULD SERVICE AND REPAIR THIS APPLIANCE.**

## TROUBLESHOOTING ISSUES

Based on the issue described, locate the appropriate category, failure, cause(s), and solution(s).

**WARNING:** Ensure the unit is off and completely cool prior to any troubleshooting.

### BURNER IGNITION ISSUES

*Progress through A-C as applicable until problem is resolved.*

*If pilot lights correctly, skip to C.*

#### A. ODS PILOT WILL NOT LIGHT

| Root Cause | Corrective Action |
|---|---|
| ODS pilot flame lifting off thermocouple/generator | Check gas pressure (Read E. - G. of INSTALLATION IMPORTANT INFORMATION section & check with local gas company). |
| Piezo spark not lighting ODS pilot | Check to make sure piezo is sparking when pressing / turning igniter. (**Note:** You may need to press / turn igniter several times to ignite ODS pilot.) See LIGHTING INSTRUCTIONS section. |
| Igniter electrode wire loose | Check wiring and reconnect any loose wiring |
| Igniter electrode positioned incorrectly | Contact your dealer for service |
| Gas supply off/manual shutoff valve closed | Turn on gas supply or open manual shutoff valve |
| Air in gas line | Hold control knob to bleed the line and repeat LIGHTING INSTRUCTIONS until air is removed. |
| Pilot hood blocked | Check for debris or dirt/ clean pilot |
| Dead batteries | Replace batteries (if applicable) |

#### B. ODS PILOT WILL NOT STAY LIT

| Root Cause | Corrective Action |
|---|---|
| Haven't pressed and held knob in long enough (if applicable) | Hold knob in for 1 minute and release. If the knob doesn't hold, contact your dealer for service (valve replace or new ODS). |
| Valve won't hold | Contact your dealer for instructions on replacement. |
| Pilot line bent / kinked at connection to valve | Replace pilot line. |
| Thermocouple is loose | Tighten thermocouple nut at gas control valve. (Do not overtighten.) |
| Thermocouple is cracked or worn out | Replace thermocouple. |

#### C. BURNER WILL NOT TURN ON

| Root Cause | Corrective Action |
|---|---|
| Low/dead batteries | Replace batteries (if applicable). |

### BURNER PERFORMANCE ISSUES

*Progress through A-C as applicable until problem is resolved.*

*Locate issues specific to problem until resolved.*

#### A. LOW FLAME HEIGHT

| Root Cause | Corrective Action |
|---|---|
| Low gas pressure | Check gas pressure. (Read E. - G. of INSTALLATION IMPORTANT INFORMATION section & check with local gas company). |
| Shut-off valve or burner valve not fully open | Open valve(s) fully. |
| Household propane tank running low | Fill tank completely. |
| Supply valve not fully open | Open supply valve fully. |
| Blockage/kink in flex connector, plumbing, or burner orifice | Clean out blockages. If flex connector is kinked, replace it. |
| Remote set on low flame (if option available) | Adjust flame with remote transmitter. |

## BURNER PERFORMANCE ISSUES (Cont.)

*Locate issues specific to problem until resolved.*

### B. BURNER HAS UNEVEN FLAME

| Root Cause | Corrective Action |
|---|---|
| Burner ports clogged | Clean burner ports. See CLEANING AND SERVICING section. |
| Top burner lights; bottom burner has delayed ignition or does not light | Check gas pressure. Can be caused by too small of a gas line (Read E. - G. of INSTALLATION IMPORTANT INFORMATION section & check with local gas company).<br>Low propane fuel gas level. Vacuum burner tube for soot blockage and fill propane tank.<br>Flash tube (if present) blocked. Clear blockage. |

### C. BURNER SHUTS DOWN DURING OPERATION

| Root Cause | Corrective Action |
|---|---|
| Insufficient or excessive gas pressure | Check gas pressure. (Read E. - G. of INSTALLATION IMPORTANT INFORMATION section & check with local gas company).<br>Other gas appliances may be on the same gas line, dropping gas pressure to log set. Check pressures with everything operating to ensure adequate pressure. |
| Foreign debris in or around the fireplace and around the air intakes of ODS pilot. | Dust, carpet fibers, paper, spider webs, pet hair, etc. in fireplace or on burner assembly can affect operation of burner and ODS pilot assembly. Clean out debris and vacuum around burner for accumulated dust. Vacuum or use compressed air to clean out the ODS pilot assembly area, air shutter hole, burner orifice(s), and ODS pilot air intake openings. Blockage in this area will affect the operation of the ODS pilot assembly. |
| Room size (unconfined space) | 50 cu. ft. is required for every 1,000 BTU. Multiply the room's length x width x height by 20 (L x W x H x 20). If resulting number is less then the BTU rating of the burner, ODS pilot outages may occur. Provisions for adequate combustion and ventilation air must be made (see VENTILATION AND COMBINED SPACE SAFETY INFORMATION). |
| Flue area, fireplace, or damper dirty from soot | Clean around, above, and under damper thoroughly. Clean fireplace, removing loose material, including soot and creosote. |
| Fans, furnaces, air conditioning vents, returns, or fireplace outside air vents near or blowing into fireplace may create drafts, altering flame patterns | Eliminate drafts by closing heating and air conditioning vents, returns, and closing outside air vents. Fans blowing directly into fireplace should be turned off when set is operating. |
| Blockages on burner | Vacuum any lava granules or material that may have fallen onto burner port area. |
| Fireplaces with high top cavities can accumulate by-products of combustion, which can start recirculating, causing shutdown | Open window or damper slightly. Move burner forward if possible, or otherwise increase ventilation. |
| Insufficient air circulation | Check log placement, ember placement, bryte coals placement, and sizing of burner system (check your owner's manual for proper placement and requirements). Reposition burner closer to the front of fireplace. (**Note:** Do not place burner too close to combustibles.)(See INSTALLATION SAFETY INFORMATION section.)<br>Check for sunken fireplace, excessive lava granules, or other accessories packed too tightly against burner or high bottom lip on glass door. Open window or damper slightly. |
| Fireplace too small for unit | Ensure minimum requirements are met (see FIREPLACE IMPORTANT INFORMATION section) |
| At high altitude, too much heat or moisture can cause ODS pilot to shut down system | Open a window or the damper slightly or otherwise increase ventilation. Your set may not be certified for use over 2,000 feet. Check your owner's manual. |
| ODS pilot flame lifting off thermocouple/generator | Check gas pressure (Read E. - G. of INSTALLATION IMPORTANT INFORMATION section & check with local gas company) |
| Pilot (remote-capable) | Contact your dealer for instructions on replacement. |
| Log placement | Reference the LOG SET PLACEMENT section in this manual for recommended log positioning. |

## OTHER ISSUES

*Progress through A-G as applicable until problem is resolved.*

*Locate issues specific to problem until resolved.*

### A. ODORS

| Root Cause | Corrective Action |
|---|---|
| New burner system (break-in period) | Burn unit for four to six hours with damper, doors or window open. Allow odors to dissipate. |
| Odors created by aerosol sprays, detergents, household chemicals, insecticides, new home, new carpet, or new paint | When these odors are drawn into the fireplace, they may cause objectionable odors. Thoroughly ventilate the area before restarting your burner system. |
| Gas leak | Shut off gas (if possible). Follow instructions on front page. Have a qualified professional service technician or the gas company correct all leaks. |

### B. SOOTING

| Root Cause | Corrective Action |
|---|---|
| Low gas pressure | Check gas pressure. (Read E. - G. of INSTALLATION IMPORTANT INFORMATION section & check with local gas company). |
| Drafts in room | Eliminate drafts by closing heating and air conditioning vents, returns, and outside sir vents. Fans blowing directly into fireplace should be turned off when system is operating. |
| Air shutter(s) blocked | Burner air shutter(s) are blocked with debris. Vacuum debris in and around burner area. |
| Using a product other than Real Fyre gas logs with burner | Make sure only Real Fyre vent-free gas logs are used with your vent-free burner. |
| Using natural-gas burner on propane gas, or propane burner on natural gas | If gas listed on nameplate does not match gas you are burning, shut down burner system immediately. Call dealer. |
| Adding any accessories to burner system | Shut down burner system and take off any accessories that do not belong with the system. |
| Blocked orifice(s) or air shutter(s) | Dust, carpet fibers, paper, spider webs, pet hair, etc. in fireplace or on burner assembly can affect operation of burner and ODS pilot assembly. Clean out debris and vacuum around burner for accumulated over time. Vacuum the ODS pilot assembly and over the air shutter holes. Any blockage in this area will affect the operation of the ODS pilot assembly. Remove and clean venturi tube if applicable. |
| Improper media placement | See DECORATIVE MEDIA PLACEMENT section for proper media placement. |
| Log placement | Reference the LOG SET PLACEMENT section in this manual for recommended log positioning. |

### C. FLAME AT AIR MIX / ORIFICE (PROPANE MODELS)

| Root Cause | Corrective Action |
|---|---|
| Burner ports clogged | Clean burner ports. See CLEANING AND SERVICING section. |
| Gas pressure | Read E. - G. of INSTALLATION IMPORTANT INFORMATION section & check with local gas company. |

### D. HIGH CO - CARBON MONOXIDE DETECTORS IN HOME TURNING ALARM ON

| Root Cause | Corrective Action |
|---|---|
| High CO levels | **TURN OFF UNIT IMMEDIATELY.** Call a qualified professional service technician or your gas supplier. |

## OTHER ISSUES (Cont.)

*Locate issues specific to problem until resolved.*

### E. CONDENSATION

| Root Cause | Corrective Action |
|---|---|
| High room humidity and cold walls or windows will create condensation in room | Open a window or damper slightly. |

### F. WHISTLING NOISE COMING FROM BURNER

| Root Cause | Corrective Action |
|---|---|
| Burner may be cold or may have not been used for a prolonged period of time | Allow burner to warm up on low. |
| Air in gas line | Contact your gas company. |
| Clogged air openings | Clean all air openings. |

### G. POPPING NOISE COMING FROM BURNER

| Root Cause | Corrective Action |
|---|---|
| Flash tube blocked | Clear flash tube of all obstructions, especially around the bottom. |

**WARNING: If the gas quality is bad, the burners will produce soot and/or your pilot will not stay lit. Contact your gas company.**

## PETERSON UNVENTED ROOM HEATER GAS APPLIANCE
### LIMITED WARRANTY

R.H. Peterson Co. ("RHP") warrants your Real Fyre® unvented room heater gas appliance to be free from defects in material and workmanship.

RHP unvented refractory gas logs and spheres are warranted for **as long as the original purchaser owns them (lifetime) when used indoors and for THREE (3) YEARS when used outdoors.**

RHP unvented fiber-ceramic blended gas logs are warranted for **FIVE (5) YEARS when used indoors and for THREE (3) YEARS when used outdoors.**

RHP **indoor** unvented gas log burners and stainless steel burners (excluding controls) are warranted for **TEN (10) YEARS**.

RHP **outdoor** unvented stainless steel burners (excluding controls) are warranted for **FIVE (5) YEARS**.

RHP valves, pilots, and controls are warranted for **ONE (1) YEAR** (excluding batteries).

RHP glass, gems, and nuggets are warranted for **TEN (10) YEARS**.

**A COPY OF YOUR SALES SLIP FOR PROOF OF PURCHASE IS REQUIRED**

This warranty applies to the original purchaser for products which are installed in the United States or Canada and which are operated and maintained as intended for single family residential usage. This warranty is valid only with proof of purchase, commences on the date of purchase, and terminates (both as to original and any replacement products) on the anniversary date of the original purchase of the product per the above schedules.

This warranty **does not** cover parts which become defective as a result of negligence, misuse, or use not in compliance with the Installation and Owner's Manual, accidental damage, improper handling, improper storage, improper installation, **lack of required routine maintenance** (as specified in the Installation and Owner's Manual), electrical damage, local gas impurities or failure to protect against combustible materials. Product must be installed (and gas must be connected) as specified in the Installation and Owner's Manual by a **qualified professional installer**. This warranty **does not** apply to normal occurrences that may be expected with any outdoor product such as rust, corrosion, oxidation, or discoloration unless the affected part becomes inoperable. RHP products including valves, pilots and controls are designed and certified to be used as a system. Modifications to products which are not specifically authorized will void this warranty and could render the product to be unsafe. Burners, valves, parts, remotes, accessories, etc. used with this product must be RHP products or this warranty is void.

Warrantied items will be repaired or replaced at RHP's sole discretion. This warranty **does not** cover labor or labor related charges, except as provided by separate specific written programs from RHP. All repair work must be performed by a qualified professional service person and requires prior approval of RHP.

RHP may require the defective product or part to be returned to the factory to determine the cause of failure. RHP will pay freight charges if the product or part is determined to be defective. This warranty does not cover breakage in shipment from our independent distributor to its customer if the damage is determined to have occurred during that shipment.

This warranty specifically excludes liability for **indirect**, **incidental**, or consequential damages. Some states and provinces do not allow the exclusion or limitation of incidental or consequential damages, so the above exclusion may not apply to you. This warranty gives you specified legal rights, and you may have other rights that vary from state to state or province.

For additional information regarding this warranty, or to place a warranty claim, contact the RHP dealer where the product was purchased.

When contacting your RHP dealer or the R.H. Peterson Co., please provide the following information:

- Your name, address, telephone number, e-mail
- Sales receipt showing where purchased and date purchased
- Model number, serial number of product, date code
- Relevant information: installer, additions, repairs, when defect was first noted

**TO REGISTER YOUR PRODUCT ONLINE GO TO: WWW.RHPETERSON.COM, AND CLICK ON PRODUCT REGISTRATION. THANK YOU FOR YOUR PURCHASE.**

### WHEN USED IN THE COMMONWEALTH OF MASSACHUSETTS

**INSTALLATION OF THIS APPLIANCE MUST BE PERFORMED BY A MASSACHUSETTS LICENSED PLUMBER OR GAS FITTER ONLY.**

**THE INSTALLATION OF THIS APPLIANCE MUST BE IN COMPLIANCE WITH 527 CMR AND 248 CMR: BOARD OF STATE EXAMINERS OF PLUMBERS AND GAS FITTERS.**

**This unvented gas appliance is designed for use in a standard wood-burning fireplace. It is designed to be used with an external wall switch or external remote thermostatic control system. Models with the suffix 12(P), 15(P), or 01V(P) are designed to be used with an external wall switch or an external remote wall thermostatic control system.**

| Quality Check | | | Date:_____ | Model #: |
|---|---|---|---|---|
| Burner Orifices | Nat. | L.P. | Leak Test: _____ | |
| Main: | ____ | ____ | Burn Test: _____<br>Gas Type: Nat. / L.P. | |
| Other: | ____ | ____ | Air Shutter: _____ | Serial #: |
| Inspector: _____ | | | | |