PVAL50 POWER VENT ADAPTOR KIT INSTALLATION INSTRUCTIONS

INSTALLER: LEAVE THESE INSTRUCTIONS WITH THE APPLIANCE.
THESE INSTRUCTIONS ARE TO BE USED IN CONJUNCTION WITH THOSE FOR THE GPV AND LHD50.
THIS INFORMATION SUPERSEDES THAT IN THE LHD50 INSTALLATION INSTRUCTIONS.
CONSUMER: RETAIN THESE INSTRUCTIONS FOR FUTURE REFERENCE.

Included in this kit:	
W010-1777	Assembly, firestop spacer
W175-0309	Connector, reducer 5/8" to 4/7"
W500-0420	Plate, electrical box cover
W750-0218	Wire harness, unit

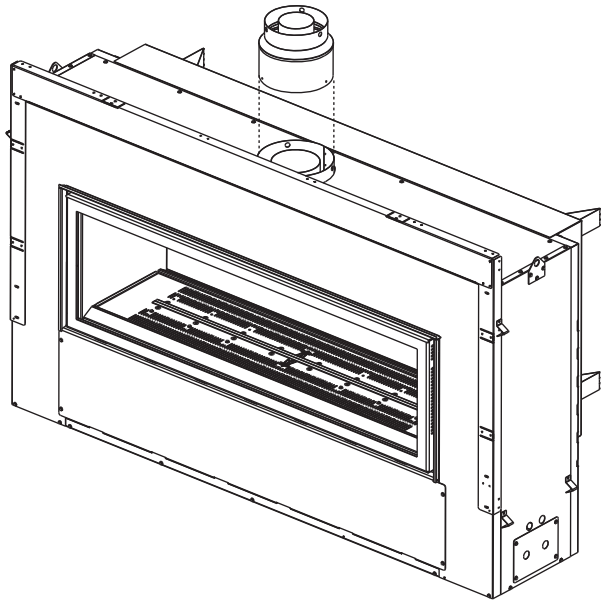

The LHD50 uses 5" and 8" flexible venting. When installing the GPV for use with the LHD50, the 4"/7" reducer (W175-0309) is required. The reducer must be properly secured and sealed to unit using high temperature sealant W573-0007 Mill Pac (not supplied) before continuing with vent installation.

TERMINAL INSTALLATION

REFER TO GPV INSTALLATION INSTRUCTIONS

FIRESTOP VENTING INSTALLATION

⚠ WARNING

The firestop assembly must be installed with the vent shield to the top.

Do not fill the cavity between the pipe and the framing with any type of material.

Terminals must not be recessed into a wall or siding more than the depth of the return flange of the mounting plate.

This application occurs when venting through an exterior wall. Having determined the correct height for the air terminal location, cut and frame a hole in the exterior wall as illustrated to accommodate the firestop assembly. Dry fit the firestop assembly before proceeding to ensure the brackets on the rear surface fit to the inside surface of the horizontal framing.

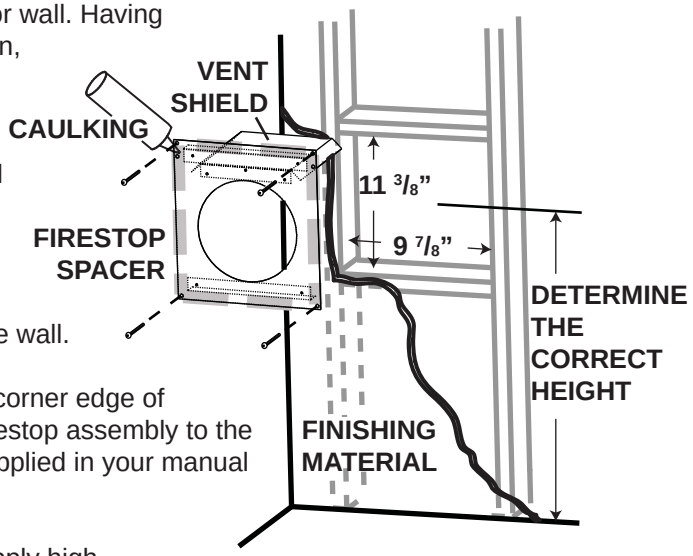

The length of the vent shield may be cut shorter for combustible walls that are less than 8 1/2" thick but the vent shield must extend the full depth of the combustible wall.

A. Apply a bead of caulking (not supplied) around the corner edge of the inside surface of the firestop assembly, fit the firestop assembly to the hole and secure using the 4 screws W570-0026 (supplied in your manual baggie).

B. Once the vent pipe is installed in its final position, apply high temperature sealant W573-0007 (not supplied) between the pipe and the firestop.

⚠ WARNING

Do not allow the inner flex pipe to bunch up on horizontal or vertical runs and elbows. Keep it pulled tight.

Spacers are attached to the inner flex pipe at predetermined intervals to maintain an even air gap to the outer flex pipe. This gap is required for safe operation. A spacer is required at the start, middle, and end of each elbow to ensure this gap is maintained. These spacers must not be removed.

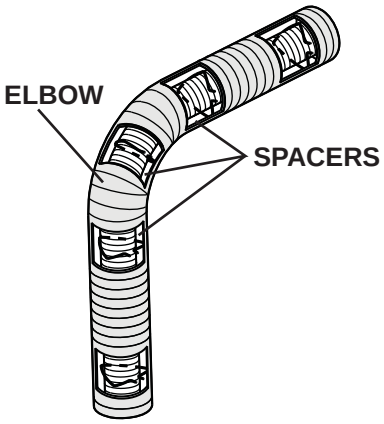

For safe and proper operation of the fireplace, follow the venting instructions exactly. All inner flex pipe and outer flex pipe joints may be sealed using high temperature sealant W573-0002 (not supplied) or the high temperature sealant W573-0007 Mill Pac (not supplied). However, the high temperature sealant W573-0007 Mill Pac (not supplied) must be used on the joint connecting the inner flex pipe and the exhaust collar.

Use only approved flexible vent pipe kits marked:



"Wolf Steel Approved Venting" as identified by the stamp only on the outer flex pipe.

ADDING VENT LENGTH

If more vent pipe needs to be used to reach the fireplace, couple them together as illustrated. The vent system must be supported approximately every 3 feet for both vertical and horizontal runs. Use noncombustible strapping to maintain the minimum clearance to combustibles.

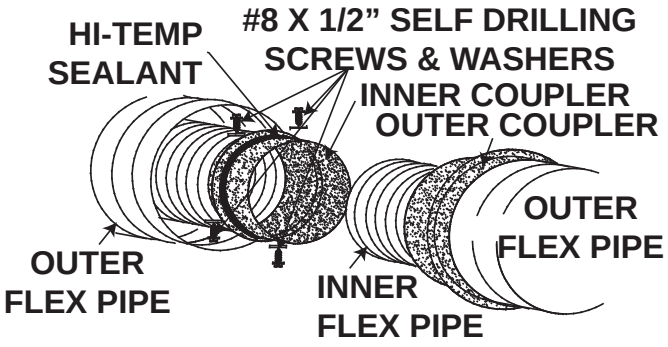

VENT LENGTHS

It is recommended that the gas power vent be used with a gas appliance that is equipped with Electronic Ignition. When installing the venting, these parameters supersede the Vent Installation Section in the appliance's Installation and Operating Instructions, as well as the following guidelines:

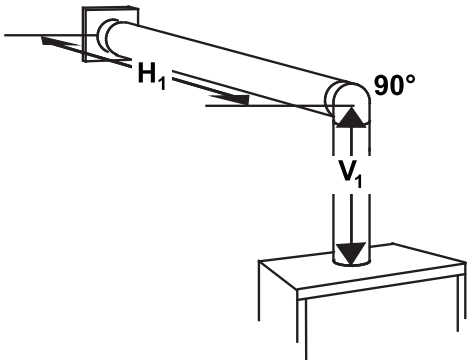

Maximum horizontal vent run with no rise is 70 feet total.

H = HORIZONTAL RUN V = VERTICAL RUN

MAX H+V	MIN H+V	MAX ELBOWS
70 FEET	10 FEET	SIX 90°

MULTI ELBOW

Multi-elbow installations are possible up to a maximum of six 90°.

MAX V1+V2+V3+ H1+H2+H3	MIN V1+V2+V3+ H1+H2+H3	MAX ELBOWS
70 FEET	10 FEET	SIX 90°

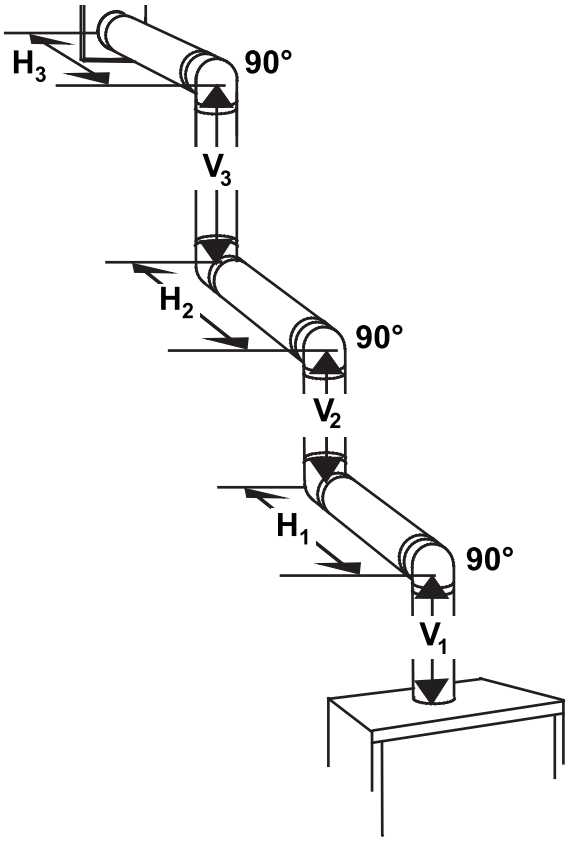

DOWNWARD VERTICAL VENTING

Downward venting installations are only allowed when the appliances is set to Intermittent Pilot Ignition (I.P.I.) Electronic Ignition (E.I.). **If an anti-condensation switch is being used, downward vertical venting is not allowed.**

MAX H1+H2+V	MIN H1+H2+V	MAX D	MAX ELBOWS
70 FEET	10 FEET	8 FEET	SIX 90°

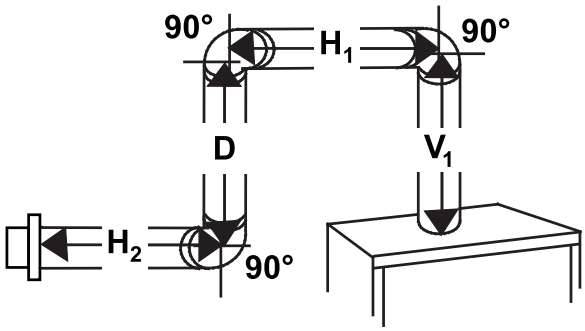

VENTURI ADJUSTMENT

This appliance has an air shutter that has been factory set open according to the chart below:

Regardless of venturi orientation, closing the air shutter will cause a more yellow flame, but can lead to carboning. Opening the air shutter will cause a more blue flame, but can cause flame lifting from the burner ports. The flame may not appear yellow immediately; allow 15 to 30 minutes for the final flame color to be established.

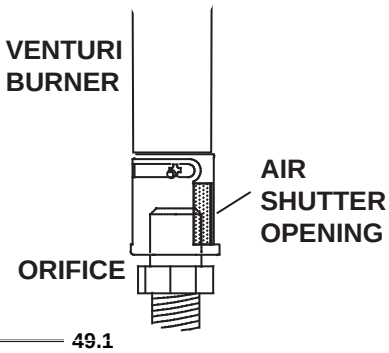

AIR SHUTTER ADJUSTMENT MUST ONLY BE DONE BY A QUALIFIED INSTALLER!

VENTURI ADJUSTMENT CHART	
FUEL	**LHD50**
NG	1/8”
LP	1/4”

RESTRICTOR PLATE INSTALLATION

The vent must be restricted using restrictor plate, W500-0491 (supplied with appliance).

Install the plate over the exhaust outlet.

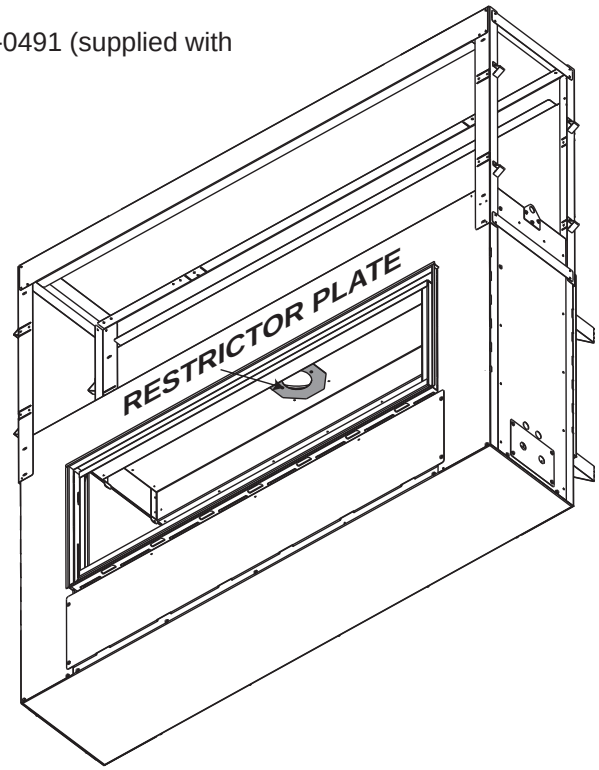

Quality System Certified To ISO 9001-2008
W415-0766 / B / 03.22.10