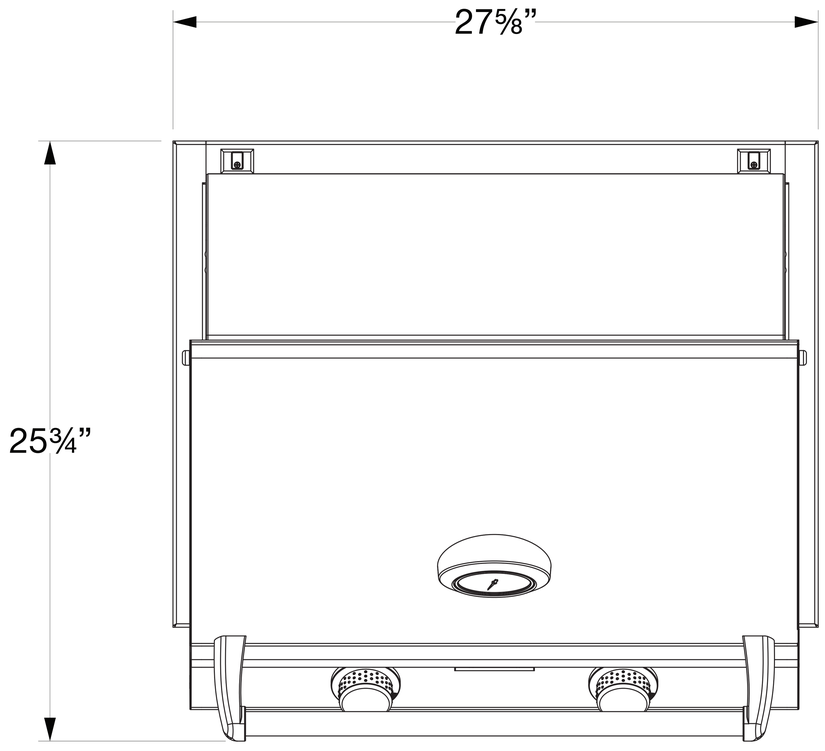

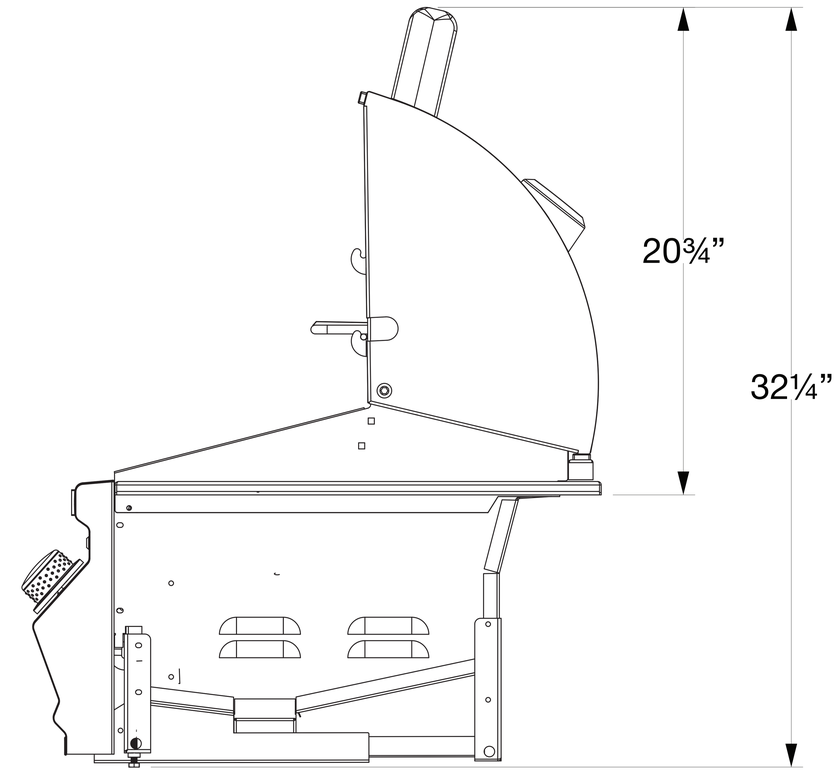

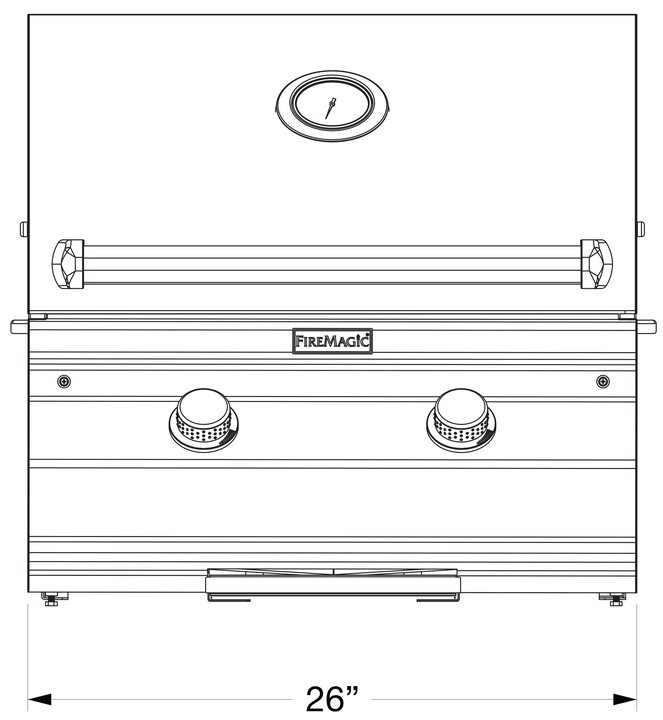

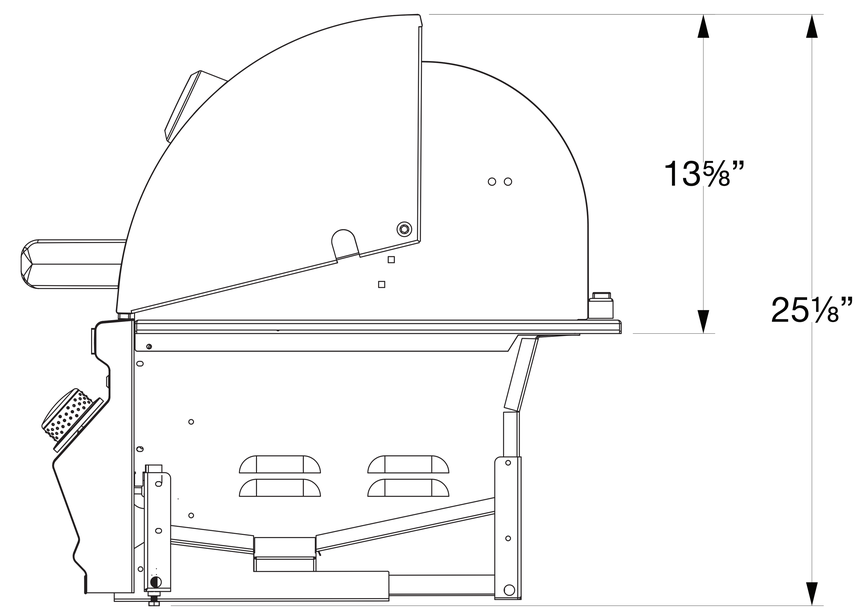

FIREMAGIC

C430i-RT1N(P) & CM430i-RT1N(P)

27″ Choice Built-In Grill (Residential & Multi-User)